Owners Guide and Installation Instructions

Rheem Wave Commercial Air to Water Inverter Pool Heat Pumps

Install a Rheem

WARNING: THIS POOL HEATER CONTAINS A2L LOW BURNING VELOCITY MATERIAL (REFRIGERANT)

This pool heater must be installed and serviced by a qualified person.
Please leave this guide with a responsible officer.

An electronic copy of these Owner's Guide and Installation Instructions can be downloaded from rheem.com.au and rheem.co.nz.

PATENTS

This pool heater may be protected by one or more patents or registered designs.

TRADEMARKS

® Registered trademark of Rheem Australia Pty Ltd.
™ Trademark of Rheem Australia Pty Ltd.

NOTE: Every care has been taken to ensure accuracy in preparation of this publication. No liability can be accepted for any consequences, which may arise as a result of its application.

CONTENTS

RESPONSIBLE OFFICER

This booklet contains important information about your new pool heater, including terms of the Rheem warranty.

We recommend you read pages 8 to 23, and the terms of the Rheem warranty on pages 4 to 7.

The other pages are intended for the installer but may be of interest.

Contents 3

Rheem Heat Pump Pool heater Warranty - ANZ Only -.....4

About Your Pool Heater 11

How Your Pool Heater Works 15

Maintenance Requirements 19

Water Chemistry And Treatment.....20

Save A Service Call 21

Installation.....24

Heat Pump And Tank Assembly 36

Manifold Installations 39

Connections – Plumbing 41

Connections - Electrical..... 43

Commissioning.....66

Draining The Pool heater 80

Trouble Shooting 81

RHEEM AUSTRALIA PTY LTD, A.B.N. 21 098 823 511
www.rheem.com.au, www.rheem.co.nz
For Service Telephone 131 031 AUSTRALIA or 0800 657 335 NEW ZEALAND

RHEEM HEAT PUMP POOL HEATER WARRANTY - AUSTRALIA & NEW ZEALAND ONLY –

HEAT PUMP POOL HEATER MODELS RTHP067YT-4QH1, RTHP067YT-4QV1, RTHP098YT-4QH1, RTHP098YT-4QV1, RTHP133YT-4QV1, RTHP203YT-4QV1, RTHP250YT-4QV1

1. THE RHEEM WARRANTY – GENERAL

1.1 This warranty is given in Australia by Rheem Australia Pty Limited ABN 21 098 823 511 of 1 Alan Street, Rydalmere New South Wales, and in New Zealand by Rheem New Zealand Limited of 475 Rosebank Road Avondale Auckland 1026.

1.2 Rheem offer a trained and qualified national service network who will repair or replace components at the address of the pool heater subject to the terms of the Rheem warranty. Rheem Service, in addition can provide preventative maintenance and advice on the operation of your pool heater. The Rheem Service contact number in Australia is 131031, with Contact Centre personnel available 24 hours, 7 days a week to take your call and if necessary to arrange a service call for during normal working hours Monday to Friday (hours subject to change) or in New Zealand on 0800 657 335.

1.3 For details about this warranty, you can contact us in Australia on 131031 or by email at service@rheemthermal.com.au (not for service bookings), or in New Zealand on 0800 657 335 or by email at rheem@rheem.co.nz (not for service bookings).

1.4 The terms of this warranty and what is covered by it are set out in sections 2 and 3 and apply to pool heaters manufactured from the 1st September 2024.

1.5 If a subsequent version of this warranty is published, the terms of that warranty and what is covered by it will apply to pool heaters manufactured after the date specified in the subsequent version.

2. TERMS OF THE RHEEM WARRANTY AND EXCLUSIONS TO IT

2.1 The decision of whether to repair or replace a faulty component is at Rheem's sole discretion.

2.2 If you require a call out and we find that the fault is not covered by the Rheem warranty, you are responsible for our standard call out charge. If you wish to have the relevant component repaired or replaced by Rheem, that service will be at your cost.

2.3 Where a failed component is replaced under this warranty, the balance of the original warranty period will remain effective. The replacement does not carry a new Rheem warranty.

2.4 Where the pool heater is installed outside the boundaries of a metropolitan area as defined by Rheem or further than 25 km from either a regional Rheem branch office or an Accredited Rheem Service Agent's / Centre's office, the cost of transport, insurance and travelling between the nearest branch office or Rheem Accredited Service Agent's / Centre's office and the installed site shall be the owner's responsibility.

2.5 Where the pool heater is installed in a position that does not allow safe or ready access, the cost of that access, including the cost of additional materials handling and/or safety equipment, shall be the owner's responsibility. In other words, the cost of dismantling or removing equipment, doors or walls and the cost of any special equipment to bring the pool heater to floor or ground level or to a serviceable position is not covered by this warranty.

2.6 This warranty only applies to the original and genuine Rheem pool heater in its original installed location and any genuine Rheem replacement parts.

2.7 The Rheem warranty does not cover faults that are a result of:

a) Accidental damage to the pool heater or any component (for example: (i) Acts of God such as floods, storms, fires, lightning strikes and the like; and (ii) third party acts or omissions).

b) Misuse or abnormal use of the pool heater.

c) Installation not in accordance with the Owner's Guide and Installation Instructions or with relevant statutory and local requirements in the State or Territory in which the pool heater is installed.

d) Connection at any time to a water supply that does not comply with the water chemistry guidelines as outlined in the Owner's Guide and Installation Instructions.

e) Repairs, attempts to repair or modifications to the pool heater by a person other than Rheem Service or a Rheem Accredited Service Agent / Centre.

f) Faulty plumbing or faulty power supply.

g) Failure to maintain the pool heater in accordance with the Owner's Guide and Installation Instructions.

h) Transport damage.

i) Fair wear and tear from adverse conditions (for example, corrosion).

j) Cosmetic defects.

2.8 Subject to any statutory provisions to the contrary, this warranty excludes any and all claims for damage to furniture, carpet, walls, foundations or any other consequential loss either directly or indirectly due to leakage from the pool heater, or due to leakage from fittings and/ or pipe work of metal, plastic or other materials caused by water temperature, workmanship or other modes of failure.

2.9 If the pool heater is not sized to supply the water heating or cooling demand in accordance with the guidelines in the Rheem pool heater literature, any resultant fault will not be covered by the Rheem warranty.

2.10 In New Zealand this warranty excludes to the extent permissible all implied warranties set out in the Sale of Goods Act 1908 (New Zealand) and all guarantees set out in the Consumers Guarantees Act 1993 (New Zealand) to the extent that the goods are acquired

for the purpose of resupply in trade consumption in the course of a process of production or manufacture or repairing or treating in trade other goods or fixtures on land.

3. WHAT IS COVERED BY THE RHEEM WARRANTY FOR THE POOL HEATERS DETAILED IN THIS DOCUMENT

3.1 Rheem will repair or replace a faulty component of your pool heater if it fails to operate in accordance with its specifications as follows:

What components are covered	The period in which the fault must appear in order to be covered	What coverage you receive
RTHP067YT, RTHP098YT, RTHP133YT, RTHP203YT, RTHP250YT models		
All components	Year 1	Repair and/or replacement of the faulty component, free of charge, including labour.
All components	Years 2 to 5	Replacement of components, free of charge. Installation and repair costs are the responsibility of the owner.
Heat exchanger	Years 6 to 25	Replacement of components due to corrosion, free of charge. Installation and repair costs are the responsibility of the owner.

4. ENTITLEMENT TO MAKE A CLAIM UNDER THIS WARRANTY

4.1 To be entitled to make a claim under this warranty you need to:

a) Be the owner of the pool heater or have consent of the owner to act on their behalf.

b) Contact Rheem Service without undue delay after detection of the defect and, in any event, within the applicable warranty period.

4.2 You are **not** entitled to make a claim under this warranty if your pool heater:

a) Does not have its original serial numbers or rating labels.

b) Is not installed in Australia or New Zealand.

5. HOW TO MAKE A CLAIM UNDER THIS WARRANTY

5.1 If you wish to make a claim under this warranty, you need to:

a) Contact Rheem on 131031 in Australia or 0800 657 335 in New Zealand and provide owner's details, address of the pool heater, a contact number and date of installation of the pool heater or if that's unavailable, the date of manufacture and serial number (from the rating label on the pool heater).

b) Rheem will arrange for the pool heater to be tested and assessed on-site.

c) If Rheem determines that you have a valid warranty claim, Rheem will repair or replace the pool heater in accordance with this warranty.

5.2 Any expenses incurred in the making of a claim under this warranty will be borne by you.

6. THE AUSTRALIAN CONSUMER LAW

6.1 Our goods come with guarantees that cannot be excluded under the Australian Consumer Law. You are entitled to a replacement or refund for a major failure and for compensation for any other reasonably foreseeable loss or damage. You are also entitled to have the goods repaired or replaced if the goods fail to be of acceptable quality and the failure does not amount to a major failure.

6.2 The Rheem warranty (set out above) is in addition to any rights and remedies that you may have under the Australian Consumer Law.

7. THE CONSUMER GUARANTEES ACT 1993 (NEW ZEALAND)

7.1 Our goods come with guarantees that cannot be excluded under the Consumer Guarantees Act 1993 (New Zealand). If the goods fail to comply with the applicable guarantees set out under the Consumer Guarantees Act 1993 (New Zealand) being the guarantee as to acceptable quality, the guarantee as to correspondence with description or the guarantee as to repair and parts, or if the goods fail to comply with any express guarantee given by Rheem, then you are entitled to a replacement or refund and for compensation for any other reasonably foreseeable loss or damage.

7.2 The Rheem warranty (set out above) is in addition to any rights and remedies that you may have under the Consumer Guarantees Act 1993 (New Zealand).

SAFETY, WARNINGS, INSTALLATION NOTES

It is important you read the following safety and warnings information.

⚠ GENERAL SAFETY AND WARNINGS

- This pool heater is designed for outdoor installation and must not be installed indoors.
- This pool heater is only intended to be operated by persons who have the experience or the knowledge and the capabilities to do so.
- This pool heater is not intended to be operated by persons with reduced physical, sensory or mental capabilities i.e. the infirm, or by children. Children should be supervised to ensure they do not interfere with the pool heater.
- If the electrical conduit to the pool heater is damaged, it must be replaced by a qualified person in order to avoid a hazard. Phone Rheem Service or their nearest Accredited Service Agent / Centre to arrange for an inspection.
- This pool heater uses 415V / 240 V AC electrical power for operation of the control systems and other electrically operated components. The removal of the access cover(s) will expose 415V / 240 V wiring. They must only be removed by a qualified person.
- This pool heater contains A2L low burning velocity material (refrigerant).
- This pool heater is supplied with built in Rheem IQ Controller which controls low and high pressure transducers.

  Additionally, the compressor is fitted with thermal overload protection, and the heat pump is supplied with built in temperature sensors and a water flow switch. These devices must not be tampered with or removed. The pool heater must not be operated unless each of these devices is fitted and is in working order.
- The pool heater will operate until an entering water temperature of 23ºC to 38ºC is reached, depending upon the setting of the controller.

  Refer to “How Hot Should The Water Be?” on **page 11**.
- For continued safety of this pool heater it must be installed, operated and maintained in accordance with the Owner’s Guide and Installation Instructions.
- Servicing of a pool heater must only be carried out by qualified personnel. Phone Rheem Service or their nearest Accredited Service Agent / Centre.

- Only a person qualified to install or service a pool heater can drain the pool heater, if this is required.
- Do not modify this pool heater.
- Do not use means to accelerate the defrosting process or to clean, other than those recommended by the manufacturer.
- Do not pierce or burn the pool heater.

⚠ REFRIGERANT WARNINGS

- The refrigerant may not contain an odour if it were to leak.
- When searching for or detecting a refrigerant leak, potential sources of ignition shall not be used under any circumstances. A halide torch (or any other detector using a naked flame) shall not be used.
- An electronic leak detector may be used to detect refrigerant leaks if it has the sensitivity to do so and is suitable for the detection of R32 refrigerant. The detector must not be a potential source of ignition. Leak detection equipment shall be set at a percentage of the lower flammability limit (LFL) of and be calibrated for R32 refrigerant in a refrigerant free area, and the percentage of gas (25% maximum) is confirmed.
- Leak detection fluids are also suitable but the use of detergents containing chlorine shall be avoided as the chlorine may react with the refrigerant and also corrode copper pipework.
- If a leak is detected or suspected, all naked flames shall be removed/extinguished, and no hot work is to be performed. Phone your nearest Rheem Service Department or Accredited Service Agent (or Service Centre in NZ) to arrange for an inspection.
- Breaking into the sealed refrigeration system, including refrigerant charging, must only be performed by suitably qualified persons and only in conjunction with the safety warnings and procedures detailed in the pool heater service manual. Refer to service manual for more information.

INSTALLATION NOTES

This pool heater must be installed:

- by a qualified person,
- in accordance with the installation instructions,
- in compliance with the Plumbing Code of Australia (PCA) and Plumbing Standard AS/NZS 3500.4,

- in compliance with the Australian / New Zealand Wiring Rules AS/NZS 3000,
    - A 30mA RCD must be installed in the switchboard in the electrical circuit to the pool heater.
    - An isolation switch must be installed at the switchboard in the electrical circuit to the pool heater, and also adjacent to the pool heater, in accordance with the Wiring Rules, so the pool heater can be switched off. Refer to "Connections – Electrical" on **page 43**.
    - The power supply wires are to be directly connected to the terminal block, with no excess wire loops inside the front cover. The temperature rating of the power supply wires insulation must suit this application.
- in compliance with AS/NZS 60335.2.40-2019 and/or ISO 5149.3-2014 with regards to A2L material (refrigerant),
- in compliance with all local codes and regulatory authority requirements,
- in New Zealand also conforming to Clauses G12 and H1 of the New Zealand Building Code.

Installation and commissioning requirements and details for the installing plumber and licensed electrical worker are contained on **pages 24 to 80**.

ABOUT YOUR POOL HEATER

POOL HEATER APPLICATION
This pool heater is designed for the purpose of heating pool or spa water. Its use in an application other than this may shorten its life.

MODEL TYPE
Congratulations for choosing a Rheem® Wave Commercial Air to Water (A2W) Inverter Pool Heat Pump. The Rheem A2W heat pump pool heater is designed for outdoor installation and must not be installed indoors.

HOW HOT SHOULD THE WATER BE?
The heat pump (compressor, evaporator and condenser) will operate until the pool water temperature reaches the set point.

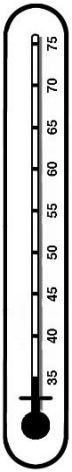

The heat pump unit has an internal thermostat, located at the control panel, which maintains the pool/spa water at the selected set point.

The normal operating temperature range is 23ºC to 38ºC (factory setting is 27°C).

- For pools, the typical temperature setting is 26ºC to 28ºC.
- For spas, the typical temperature setting is 38ºC.

⚠ **Warning:** Always check the pool or spa water temperature before bathing to ensure it is suitable and will not cause injury.

TEMPERATURE ADJUSTMENT
Note: For 133kW, 203kW and 250kW models, temperature adjustment is performed via the main control panel (refer to **page 18** to identify which control panel is the main control panel).

Set point quick setting: Tap **'Prg'** from the Main control panel home screen and the Set Point page will appear. Tap **'ente**r' to access change. Cursor will be on the set temperature. Tap **'up'** or **'down'** to adjust the setting in 0.1 increments. Touch and hold for rapid change. Tap **'enter'** to confirm change. Tap **'Esc'** to return to the home screen. Refer to **page 59** for more information.

BEAST MODE
Note: For 133kW, 203kW and 250kW models, beast mode is engaged via the main control panel (refer to **page 18** to identify which control panel is the Main control panel).

When beast mode is engaged, the compressor runs at maximum speed to rapidly heat the pool water to the set point. When the set point is reached, the compressor turns off and operates as normal thereafter.

ABOUT YOUR POOL HEATER

To engage beast mode: Tap **'Prg'** from the Main control panel home screen and the Set Point page will appear. Tap **'down'** until the Beast Mode Engage page appears. Tap **'ente**r' to access change. Tap **'up'** or **'down'** to select 'Yes'. Tap **'enter'** to confirm. Tap **'Esc'** to return to the home screen. Refer to **page 59** for more information.

PRECAUTIONS

The pool heater must be maintained in accordance with the Owner's Guide and Installation Instructions. Refer to "Maintenance Requirements" on **page 19**.

If this pool heater is to be used where an uninterrupted heating or cooling supply is necessary for your application or business, you should ensure that you have back-up redundancy within the pool or spa heating system design. This should ensure the continuity of heating or cooling in the event that this pool heater were to become inoperable for any reason. We recommend you seek advice from your installer or specifier about your needs and building back-up redundancy into your pool or spa heating system.

Do not use **aerosols, stain removers and chemicals** near the pool heater whilst it is working. Gases from some aerosol sprays, stain removers and chemicals are corrosive to the materials used in the heat pump system.

Do not store swimming pool chemicals, household or industrial cleaners, etc., near the pool heater.

Ensure the air inlet and outlet louvres and air flow are not obstructed in any way at any time.

TO TURN OFF THE POOL HEATER

1. Whilst in home screen on Main control panel, tap '**Esc'**. The screen will change to 'Main Menu' screen with 'A. On/Off Unit' highlighted.
2. Tap **'Enter'**. The screen will change to show a knob in the 'ON' position.
3. Tap **'Enter'**. A small square will start flashing on the screen.
4. Tap **'up'** or **'down'**. The on-screen knob will rotate to the 'OFF' position and the heat pump will turn OFF.
5. Tap **'Esc'** twice to go back to home screen. The home screen will display 'Unit OFF by KEYPAD'.
6. To isolate the electrical supply to the heat pump, turn OFF heat pump electrical isolator located adjacent to the heat pump.

ABOUT YOUR POOL HEATER

TO TURN ON THE POOL HEATER

First, ensure the system is filled with water and all valves between the pool (and/or spa) and the pool heater are in the correct position to permit water flow through the heat pump.

1. Tap ‘**Esc’** on Main control panel. The screen will change to 'Main Menu' screen with 'A. On/Off Unit' highlighted.
2. Tap **‘Enter’**. The screen will change to show a knob in the 'OFF' position.
3. Tap **‘Enter’**. A small square will start flashing on the screen.
4. Tap **‘up’** or **‘down’**. The on-screen knob will rotate to the 'ON' position and the heat pump will turn ON.
5. Tap **‘Esc’** twice to go back to home screen. The home screen will display ‘Unit is On’.

The heat pump will automatically start if heating is required* and after expiry of any start delays which may take up to 6 minutes.

* For systems utilising the existing pool circulating pump, provided the pool pump is operating.

Note: The pool heater may not turn on immediately when it is first switched on, if it is switched on within 20 minutes to 2 hours of it having been switched off at the isolating switch, or if the heat pump has just completed a heating cycle. The pool heater will wait until the conditions for start-up are favourable in order to protect the compressor from damage. This may take up to 20 minutes to 2 hours.

ABOUT YOUR POOL HEATER

DOES WATER CHEMISTRY AFFECT THE POOL HEATER?
Some water chemistries may have detrimental effects on the pool heater and its components and fittings. **Refer to "Water Chemistry & Treatment" on page 20**. If you are not sure, have your water chemistry checked against the conditions described on **page 20**.

HOW LONG WILL THE POOL HEATER LAST?
Your pool heater is supported by a manufacturer's warranty (refer to **page 4**). There are a number of factors that will affect the length of service the pool heater will provide. These include but are not limited to the water chemistry, the water pressure, and temperature and heating requirements.

ENVIRONMENT
At the end of the service life of the heat pump pool heater and prior to the pool heater being disposed of, a person qualified to work with refrigerants must recover the refrigerant from within the sealed system. The refrigerant must not be vented to atmosphere. Phone your nearest Rheem Service Department or Accredited Service Agent (or Service Centre in NZ) to arrange for an inspection.

VICTORIAN CUSTOMERS
Notice to Victorian Customers from the Victorian Building Authority. This pool heater must be installed by a licensed person as required by the Victorian Building Act 1993.

Only a licensed person will give you a Compliance Certificate, showing that the work complies with all the relevant Standards. Only a licensed person will have insurance protecting their workmanship for 6 years. Make sure you use a licensed person to install this pool heater and ask for your Compliance Certificate.

HOW YOUR POOL HEATER WORKS

The Rheem Wave Commercial Air to Water Inverter Pool Heat Pump is a monobloc type suitable for outdoor installation only. The pool heater produces a sound level of up to 67 dBA (measured at 3 metres) when it is operating and utilises refrigeration principles to transfer heat between the atmosphere and water flowing through the pool heater. The principal of operation and sound level are similar to that of an air conditioner.

The following information details pool heater operation for heating and cooling which is the default setting. Pool heaters set for heating only will operate as detailed but will not operate to cool to set point. (Set point is the pool heaters temperature setting).

When the pool heater is turned on, it energises the circulating pump which operates and circulates water from the pool, through the heat pump heat exchanger and back to the pool. *Note: Some applications may use the existing pool filtration pump which is not controlled by the pool heater. In this instance the filtration pump must be operating for the pool heater to operate. Note: Filtration pump operating times less than 24 hours may not permit the pool heater to sufficiently heat.*

When the pool heater determines that heating is required, (based on the water temperature entering the pool heater), it energises its compressor and evaporator fans which commence operation.

Air is drawn in through the inlet louvres on the side of the pool heater and then past the evaporator where heat is transferred from the air to the refrigerant. Pool water is circulated from the pool through the heat exchanger (where refrigerant heat is transferred to the pool water) and back to the pool until the set point temperature is reached, at which time the pool heaters compressor and evaporator fans are turned off.

When heating, the normal water temperature rise through the heat exchanger for a single heat pump is 0.2-4ºC (outlet temperature minus inlet temperature).

If the pool heater is also set for cooling (which is the default setting) the pool heater will operate to transfer heat from the water flowing through the heat pump to atmosphere as follows:

When the heat pump determines that cooling is required (based on the water temperature entering the pool heater), it energises its compressor and evaporator fans which commence operation. The heat pump reversing valve is also energised to reverse the flow of refrigerant in the refrigeration system.

Pool water is circulated from the pool through the heat exchanger (where pool water heat is transferred to the refrigerant) and back to the pool until the set point temperature is reached, at which time the heat pumps compressor and evaporator fans are turned off (reversing valve remains energised). During

cooling, air is drawn in through the inlet louvres on the side of the pool heater and then past the evaporator where heat is transferred from the refrigerant to the air.

When cooling, the normal water temperature drop through the heat exchanger for a single pool heater is 0.2-2.5ºC (inlet temperature minus outlet temperature).

Even on cold days, heat is drawn from the surrounding air. The heat pump will operate most efficiently at temperatures above 0ºC and maximum of 45ºC. The efficiency of the pool heater is relative to the surrounding air temperature and the incoming water temperature.

Automatic safety controls are fitted to the pool heater to provide safe and efficient operation.

OPERATION AT LOW OR HIGH AMBIENT TEMPERATURE
If the ambient air temperature falls below 0ºC or above 45ºC, the heat pump may cease heating to protect heat pump components from damage. The heat pump will start operating again when the air temperature becomes between 0-45ºC.

FROST PROTECTION
If the pool water temperature falls below 5ºC, frost protection mode is automatically activated, and the circulating pump is switched on to prevent water in the pool heater from freezing. Frost protection mode is even activated if the pool heater is turned off, provided power is still available at the pool heater.

The circulating pump must be controlled by the heat pump for frost protection mode to operate, and frost protection mode cannot operate during periods of no power supply e.g. during black outs, brown outs or if the heat pump is electrically isolated. For applications in areas where freezing conditions may occur, and frost protection mode cannot be utilised, it is recommended to disconnect and drain down the pool heater to protect from freeze damage. Refer to **page 80**. **Freeze damage is not covered by the Rheem warranty.**

THERMAL CUT OUT
The refrigeration circuit is protected by thermal sensors. These will activate a thermal cut out in the event of excessive heat in the refrigeration system.

If the thermal cut out has activated, the heat pump will not operate for a period of 20 minutes to 2 hours. The pool heater will make two more attempts to start up. If the thermal cut out is tripped again after the third attempt, the system will enter lock out and the alarm contacts will close. If connected to a BMS, this will alert the user that the unit is not operating.

The lockout condition can be manually reset by switching the power to the pool heater off and then on.

HOW YOUR POOL HEATER WORKS

OPTIONAL POWER METER KIT
An optional power meter kit enables energy monitoring. Models fitted with an optional power meter kit have an 'X' suffix in the model number e.g. RTHP067YT-4QV**X**-1

CONTROL FUNCTIONALITY
The controller provides a user friendly interface for control and diagnostics and provides comprehensive temperature management for all season comfort.

Remember, even on cloudy and cold days your heat pump pool heater will heat your pool water.

SUPERIOR MONITORING

The A2W Heat Pump System is supplied with 8 sensors:

1. Water inlet temperature sensor
2. Water outlet temperature sensor
3. Refrigerant suction side temperature (superheat)
4. Refrigerant discharge side temperature
5. Suction pressure transducer
6. Discharge pressure transducer
7. Ambient air temperature sensor
8. Evaporator coil sensor

The output of these sensors is displayed on the control panel to ensure correct system operation.

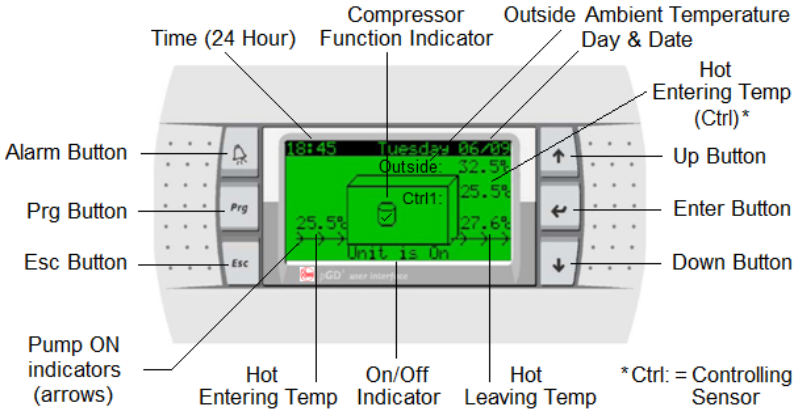

67kW and 98kW models have one control panel whilst 133kW, 203kW and 250kW models have two control panels, one for the Main heat pump and one for the Sub heat pump.

HOW YOUR POOL HEATER WORKS

The Main control panel is the only control panel that displays the controlling ‘Ctrl’ (hot entering) and outside (outdoor ambient) temperature sensor values on the home screen. Sub control panels do not display the controlling or outside temperatures which is how they can be identified.

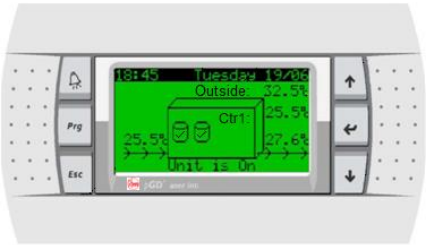

Main Home Screen

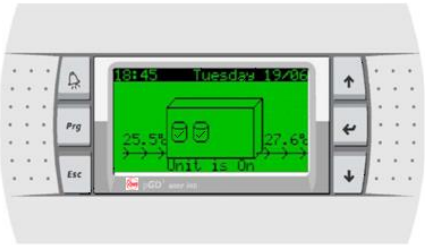

Sub Home Screen

Temperature adjustment is performed via the Main control panel. For temperature adjustment, refer to **page 11**.

Beast Mode can also be engaged via the Main control panel to rapidly heat the pool water when needed. To engage Beast Mode, refer to **page 11**.

The system can be connected to a BMS. Modbus RS485 is provisioned on the controller for a single 67kW or 98kW heat pump that does not have a power meter kit fitted. Modbus RS485, BACnet MS-TP or BACnet TCP/IP Ethernet interface cards, supplied by Rheem as an accessory, are required for any other configuration. Contact Rheem for further information on BMS.

A power meter kit is available as an option to enable power control and monitoring of the system. Models fitted with an optional power meter kit have an ‘X’ suffix in the model number e.g. RTHP067YT-4QV**X**-1. Contact Rheem for further information on remote monitoring.

MAINTENANCE REQUIREMENTS

WARNING: THIS POOL HEATER CONTAINS LOW BURNING VELOCITY MATERIAL (REFIGERANT)

MINOR MAINTENANCE EVERY SIX MONTHS

It is recommended minor maintenance be performed every six (6) months by a responsible officer. The minor maintenance includes:

- Check condensate drain is not blocked.
- Trim any encroaching vegetation from around the pool heater if required.

ANNUAL SERVICE

It is recommended the commercial heat pump be serviced annually, to retain optimum performance. Servicing must be performed only as recommended by Rheem Australia.

Servicing and/or breaking into the sealed refrigeration system, including refrigerant charging, must only be performed by suitably qualified persons and only in conjunction with the safety warnings and procedures detailed in the pool heater service manual. Refer to service manual for more information.

The annual service includes:

1. Check to ensure pool skimmer basket and/or plumbing filters plumbed in line with heat pump(s) are clean.
2. Check to ensure heat pump clearances are maintained. Trim any encroaching vegetation if required.
3. Check for signs of excessive corrosion on heat pump casing.
4. ***Isolate power*** to heat pump and check all electrical connections for signs of overheating due to poor connection.
5. Clean blockages and debris from evaporator fins, fan blades, grilles and louvres.
6. Clean blockages and debris from inverter drive fans (or heat sink), grilles and louvres.
7. Check condensate drain for blockages – clear if necessary.
8. Restore power, ensure a call for heat is present and check for vibration or excessive noise from compressor and fans.
9. Check for leaks at all heat pump fittings.
10. Validate correct water flow switch operation.
11. Check refrigerant pressures and adjust refrigerant charge if required.
12. Check operation of reversing valve by manually operating the valve.
13. Visually check system for any potential problems.
14. Validate correct system operation.

WATER CHEMISTRY AND TREATMENT

This pool heater must be installed in accordance with this advice to be covered by the Rheem warranty.

The pool heater has a titanium heat exchanger. Titanium is impervious to chemical corrosion and as such, variations in water quality will not cause damage to the titanium tube. However, it is recommended as a matter of good pool/spa management that correct water balance is maintained.

Correct water balance depends on a combination of Ph, alkalinity, calcium hardness and water temperature. These levels are essential for water balance and effective sanitation of your pool or spa. The following information is a guide to good water balance:

	Fibreglass Pools & Spas	Other Pools & Spas
pH	7.2 ~ 7.4	7.3 ~ 7.8
Total Alkalinity (PPM)	120 ~ 150	80 ~ 120
Calcium Hardness (PPM)	200 ~ 300	200 ~ 400
Salt (PPM)	6000 Max	6000 Max
Free Chlorine (PPM)	2 ~ 3	2 ~ 3

Adverse water chemistry may have detrimental effects on pool heater components and fittings and exceeding the following values will void the Rheem warranty:

- pH must be kept between 7.2 and 7.8
- Alkalinity must not exceed 200 PPM
- Free available chlorine must not exceed 6 PPM
- Bromine must not exceed 5 PPM
- All in line chlorination and chemical dosing must be installed/performed downstream of the pool heater.

SANITISING LEVELS

Automatic chlorinators and chemical dosing devices are usually more efficient in heated water, overcast conditions, and in covered pools or spas, and unless controlled may produce excess chlorine levels.

If the pool heater is plumbed in-line with the existing filtration system, thought must be given to possible over chlorinating and/or chemical overdosing by the extended running of automatic chlorinator, chemical dosing devices, etc.

Note: If chlorine or bromine levels are too high, test kits may provide an incorrect or nil chlorine reading.

SAVE A SERVICE CALL

Check the items below before making a service call. You will be charged for attending to any condition or fault that is not related to manufacture or failure of a part.

HEAT PUMP IS NOT OPERATING

- **Is the electricity switched on?**
  Inspect the isolating switch marked “POOL HEATER” or “SPA HEATER” at the switchboard and the isolating switch at the spa/pool heater and ensure they are turned on.

  Check the circuit breaker marked “POOL HEATER” or “SPA HEATER” at the switchboard.

- **Is the alarm light flashing RED on pool heater controller?**
  If the alarm light is flashing RED, check the alarm by pressing the alarm button. Phone your nearest Rheem Service Department or Accredited Service Agent (or Service Centre in NZ) to inform about the alarm.

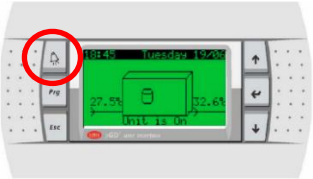

- **Is a timer, scheduler or tariff control option set?**
  If a timer has been set, ensure operating time periods are correct and sufficient time has been allowed for adequate heating. Ensure any heat pump controller or power meter scheduling or tariff control options are correctly set.

- **Are system valves in the correct position?**
  The heat pump will not operate if the water flow through the heat pump is insufficient. Check to ensure all valves are in the correct position to permit water flow through the heat pump and that the circulating pump is operating. Refer to “Circulating pump not operating” for more information on water flow.

- **Circulating pump not operating?**
  The heat pump will not operate if the circulating pump has failed or is not operating.

  Some applications may use the existing pool filtration pump which is not controlled by the pool heater. In this instance the filtration pump must be operating for the pool heater to operate – Check pump and pool heater operating times to ensure they are correct. Note: Filtration pump operating times less than 24 hours may not permit the pool heater to sufficiently heat.

SAVE A SERVICE CALL

The pool heater has a water flow switch, and if water flow is not detected the heat pump will not operate and display an alarm on the control panel. The pool heater will make two more attempts to start. If water flow is not detected after the third attempt, the system will enter lock out. If connected to a BMS, this will alert the user that the unit is not operating.

To check whether there may be a problem, switch the power to the pool heater off and on again at the circuit breaker to the pool heater. The heat pump, if working properly with correct water flow, will activate and continue operating to heat the water.

- **Ambient air temperature is too cold**
  If the ambient air temperature falls below 0ºC, the heat pump may cease heating to protect heat pump components from damage. The heat pump will start operating again when the air temperature increases to above 0ºC.

- **Thermal cut out activated**
  Has the thermal cut out for the heat pump compressor activated?

  If the thermal cut out has activated, the heat pump will not operate for a period of 20 minutes to 2 hours and display an alarm on the control panel. The pool heater will make two more attempts to start. If the thermal cut out is tripped again after the third attempt, the system will enter lock out. If connected to a BMS, this will alert the user that the unit is not operating.

  To check whether there may be a problem, switch the power to the pool heater off and on again at the circuit breaker to the pool heater. The heat pump, if working properly, will activate and continue operating to heat the water.

WATER TOO HOT

The pool heater is designed to heat the pool/spa water to a temperature of 23°C to 38°C depending on the set point (temperature setting).

WATER NOT HOT ENOUGH

- **Is a timer, scheduler or tariff control option set?**
  If a timer has been set, ensure operating time periods are correct and sufficient time has been allowed for adequate heating. Ensure any heat pump controller or power meter scheduling or tariff control options are correctly set. Note: operating times less than 24 hours may not permit the pool heater to sufficiently heat.

- **Are circulating pump operating times adequate?**

SAVE A SERVICE CALL

Some applications may use the existing pool filtration pump which is not controlled by the pool heater. In this instance the filtration pump must be operating for the pool heater to operate – Check pump and pool heater operating times to ensure they are correct. Note: Filtration pump operating times less than 24 hours may not permit the pool heater to sufficiently heat.

- **Ambient air temperature is cold – Defrost mode**
  Ice may begin to form on the evaporator when the ambient air temperature falls below 7ºC. The heat pump will enter a defrost mode when ice is sensed on the evaporator coil. The recovery rate of the heat pump is reduced in defrost mode due to the lower operating air temperature and heating of water is reduced during the defrost cycle.

- **Ambient air temperature is too cold**
  If the ambient air temperature falls below 0ºC, the heat pump may cease heating to protect heat pump components from damage. The heat pump will start operating again when the air temperature increases to above 0ºC.

- **Pool heater size**
  Do you have the correct size pool heater for your requirements? Contact our sales team at info@rheemthermal.com.au.

HIGH ELECTRICITY BILLS

With the installation of your new air sourced heat pump pool heater, maximum electrical energy savings can be achieved. Should you at any time, feel your energy account is too high, we suggest you check the following points:

The heat pump pool heater operates at its most efficient at higher air temperatures. Prolonged periods of low ambient temperature will decrease the efficiency of the system and increase running costs.

Excessive heat loss may be occurring. Pools and spas can benefit from a cover or blanket to retain heat.

The higher the set point temperature the higher the energy usage. Consider reducing the set point temperature to reduce running costs.

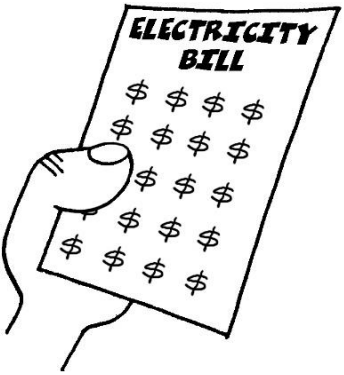

IF YOU HAVE CHECKED ALL THE FOREGOING AND STILL BELIEVE YOU NEED ASSISTANCE, CALL YOUR NEAREST RHEEM SERVICE DEPARTMENT OR ACCREDITED SERVICE AGENT.

INSTALLATION

THIS POOL HEATER IS FOR OUTDOOR INSTALLATION ONLY.

THIS POOL HEATER IS NOT SUITABLE FOR POTABLE WATER HEATING APPLICATIONS.

INSTALLATION STANDARDS
The pool heater must be installed:

by a qualified person, and

in accordance with the installation instructions, and

in compliance with the Plumbing Code of Australia (PCA), Standards AS/NZS 3500.4, AS/NZS 3000, AS/NZS 60335.2.40-2019 and/or ISO 5149.3-2014 and all local codes and regulatory authority requirements.

in New Zealand also conforming to Clauses G12 and H1 of the New Zealand Building Code.

All packaging materials must be removed from the pool heater prior to its installation.

POOL HEATER APPLICATION
This pool heater is designed for the purpose of heating pool and/or spa water. Its use in an application other than this may shorten its life.

If this pool heater is to be used where an uninterrupted heating or cooling supply is necessary for your application or business, you should ensure that you have back-up redundancy within the pool or spa heating system design. This should ensure the continuity of heating or cooling in the event that this pool heater were to become inoperable for any reason. We recommend you seek advice from your installer or specifier about your needs and building back-up redundancy into your pool or spa heating system.

COMPONENTS
The heat pump pool heater system is modular and comprises two main components: The heat pump pool heater and circulating pump. The pool heater must not be operated until all components are assembled, and the system has been filled with water.

Do not tilt the heat pump more than 45° from the vertical. This will unsettle the refrigerant gas and compressor lubricating oil. If the heat pump has been tilted more than 45° from the vertical during handling, it will need one hour to settle before the power to the pool heater can be switched on, otherwise damage to the compressor may result.

INSTALLATION

POOL HEATER LOCATION

The pool heater is designed for outdoor installation and must not be installed indoors.

The pool heater must not be operated until the system has been filled with water and all valves are in the correct position to permit water flow through the unit.

Clearance must be allowed for correct air flow and for servicing the pool heater, and where multiple heat pumps are to be installed, additional clearances must be provided. Refer to **page 35** for clearance data.

Good performance is obtained when the heat pump is supplied with a constant supply of fresh air. Care should be taken to ensure that walls, eaves, etc. do not cause recirculation of discharge air into the intake air stream of the heat pump which can drastically reduce efficiency and cause excessive icing of the evaporator coil. Failure to observe these recommendations may lead to lower than expected performance or problematic operation of the heat pump.

The pool heater should be installed close to other system equipment like filter, circulating pump, etc. to minimise friction and heat loss, and its position should be chosen with noise, safety and service in mind. Make sure the air inlet and fan outlet grilles are clear of obstructions and shrubbery and that they are unlikely to be touched by people (especially children).

It is advisable to install the pool heater away from bedroom or living room windows as the system can generate noise of up to 67dBA (at 3 metres from the pool heater) whilst operating, and wherever possible the exhaust air should be directed away from occupied areas.

It is recommended the pool heater be installed at ground or floor level. The pool heater must be accessible without the use of a ladder or scaffold, and you must be able to read the information on the rating plate. Remember you may have to remove the entire pool heater later for servicing.

The pool heater must stand vertically upright and must be installed on a firm base such as a concrete slab. **Note:** to assist with condensate drainage, the heat pump has a 2.5 degrees slope towards the drains. Do not level the unit.

The pool heater must not be installed in an area with a corrosive atmosphere, where chemicals are stored or where aerosol propellants are released. Remember the air may be safe to breathe, but the chemicals may attack the materials used in the heat pump system.

INSTALLATION

SADDLING PIPE WORK

To prevent damage to the heat pump when attaching pipe clips or saddles to the pool heater jacket, we recommend the use of self-drilling screws with a maximum length of 12 mm. Should pre-drilling be required, extreme caution must be observed when penetrating the jacket of the pool heater.

Avoid drilling or saddling in the vicinity of the evaporator coil. The coil and refrigerant circuit are in close proximity to the jacket and rupturing of the refrigerant circuit may occur.

Note: If the heat pump is damaged as a result of attaching pipe clips or saddling to the jacket, any resultant faults will not be covered by the Rheem warranty.

INSTALLATION

Typical Installation of Single Heat Pump Plumbed into Existing Pool Filtration System

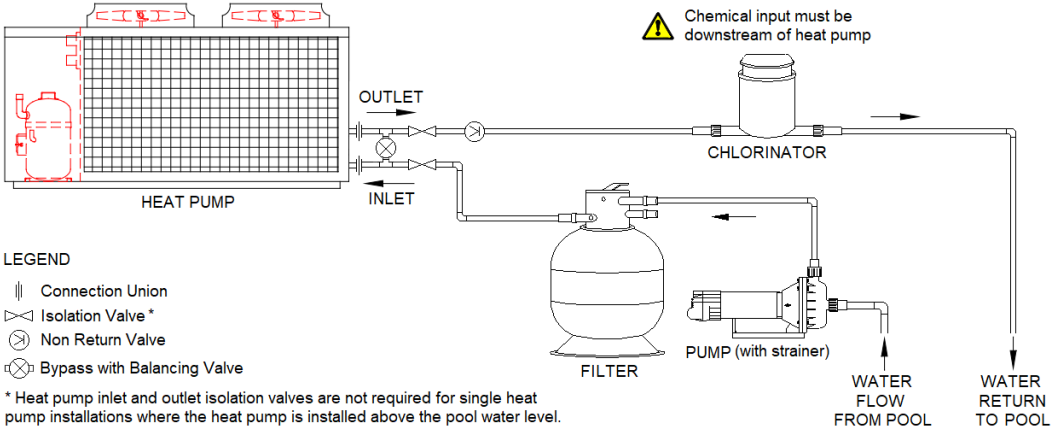

- Plumbing and flow rate must be according to circulating pump and plumbing requirements on **page 37**.
- The filtration system pump must be operating for the heat pump to operate.

INSTALLATION

Typical Retrofit Installation of Single Heat Pump with Dedicated Circulating Pump Controlled By the Heat Pump

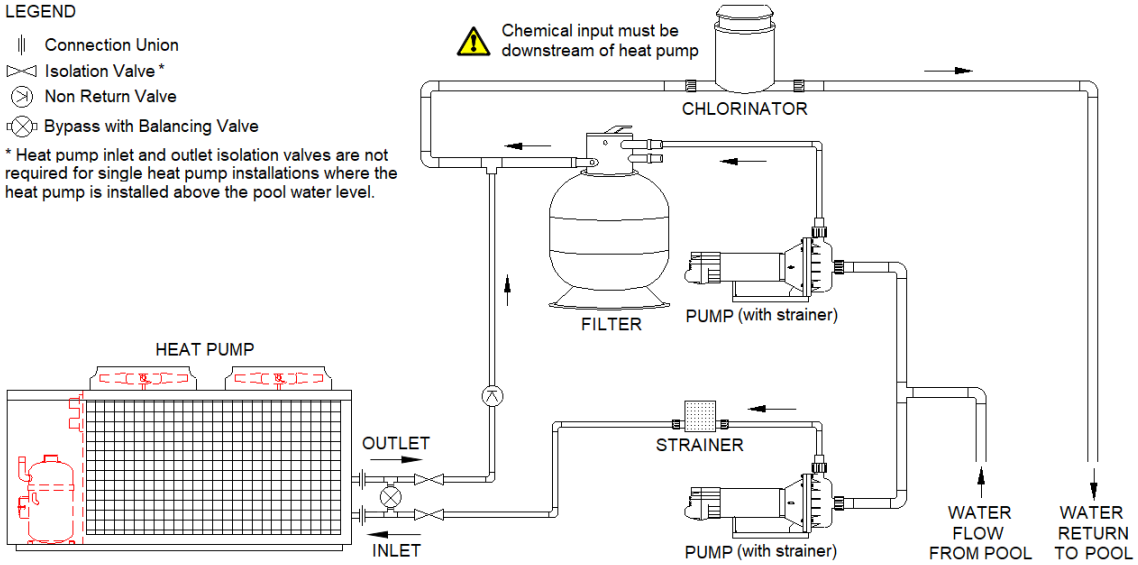

- Plumbing and flow rate must be according to circulating pump and plumbing requirements on **page 37**.

INSTALLATION

Typical Manifold Installation of Multiple Heat Pumps

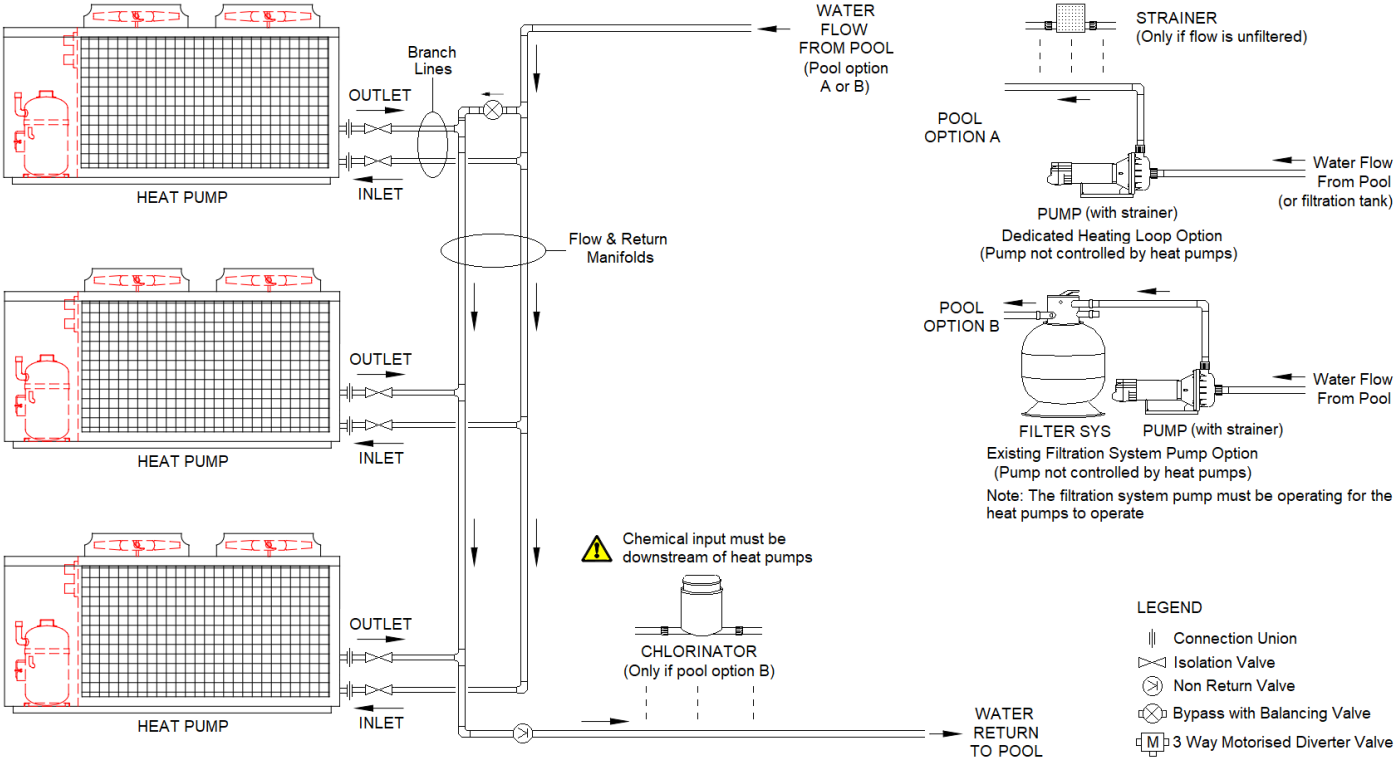

- Manifolds, branch lines and flow rate must be according to manifold installation requirements on **page 39**.

INSTALLATION

Typical Manifold Installation of Multiple Heat Pumps with Optional Spa and Motorised Diverter Valves

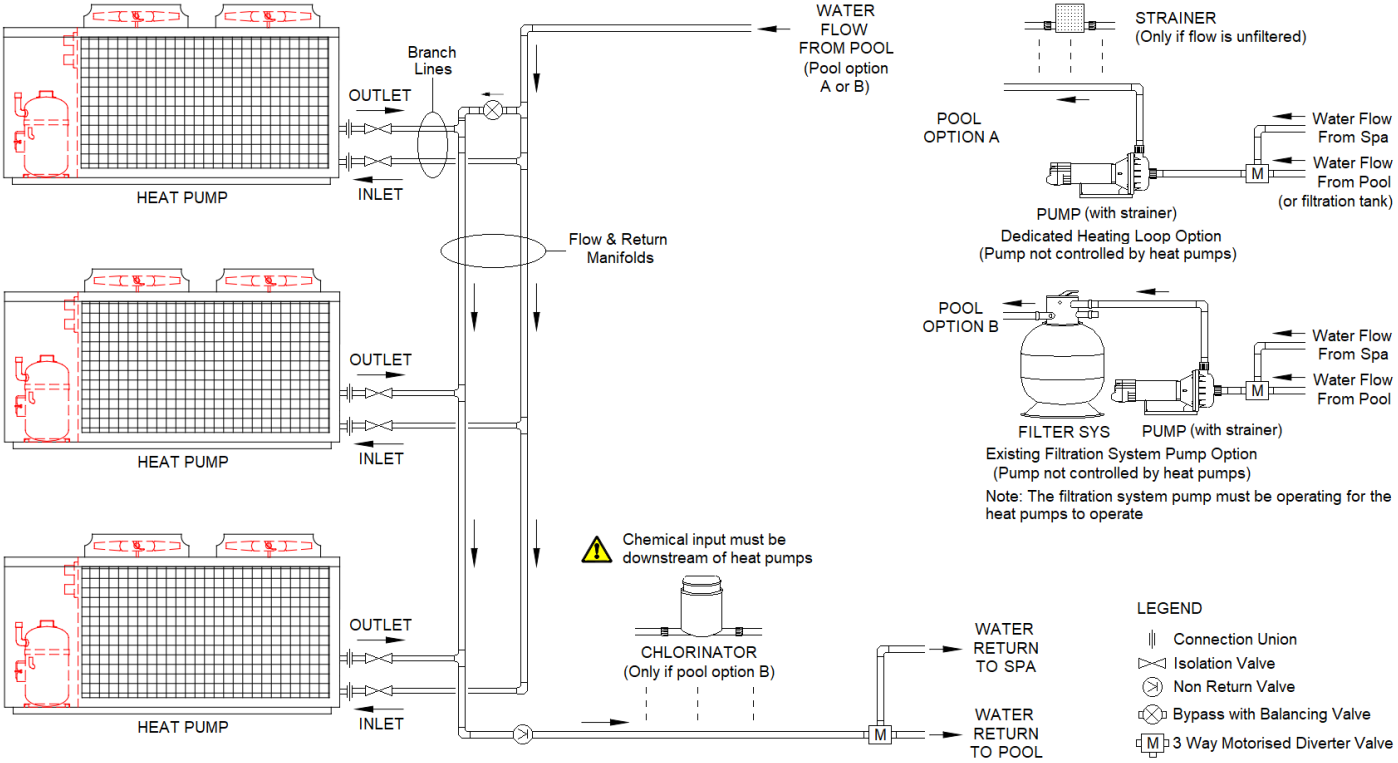

- Manifolds, branch lines and flow rate must be according to manifold installation requirements on **page 39**.

INSTALLATION

Dimensions and Technical Data – 67kW Models

RHEEM A2W 67kW – Horizontal Discharge
RTHP067YT-4QH-1

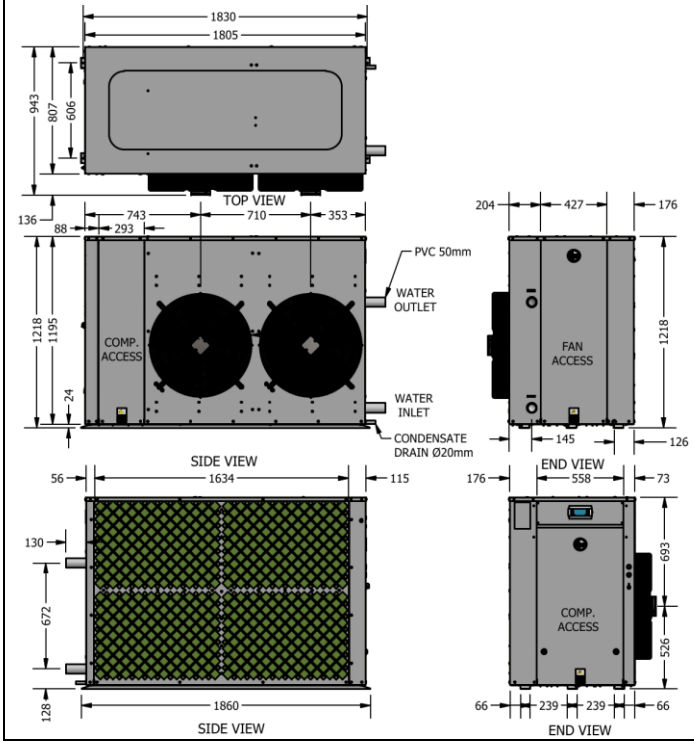

RHEEM A2W 67kW – Vertical Discharge
RTHP067YT-4QV-1

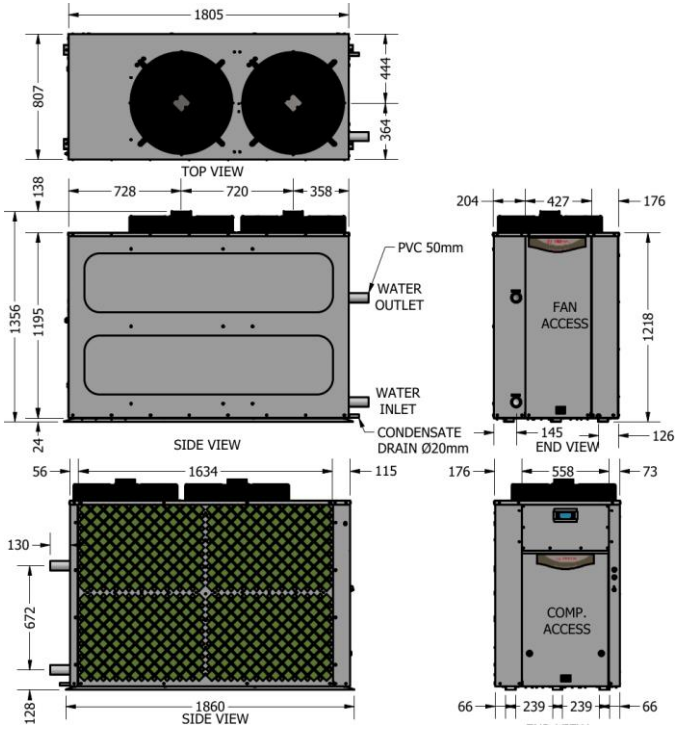

INSTALLATION

Dimensions and Technical Data – 98kW Models

RHEEM A2W 98kW – Horizontal Discharge
RTHP098YT-4QH-1

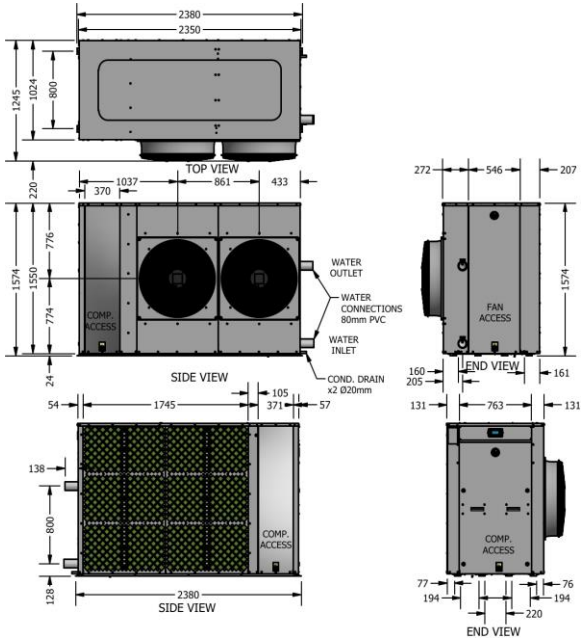

RHEEM A2W 98kW – Vertical Discharge
RTHP098YT-4QV-1

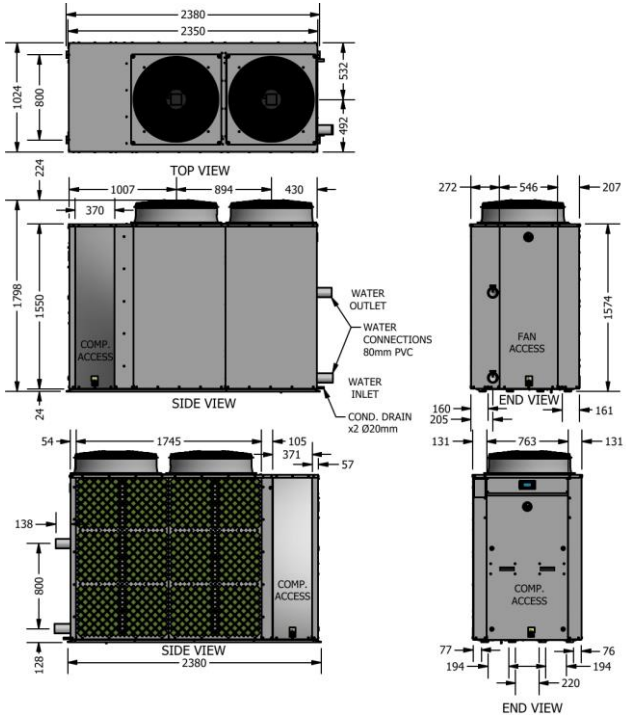

INSTALLATION

Dimensions and Technical Data – 133kW Models & 203kW Models

RHEEM A2W 133kW – Vertical Discharge
RTHP133YT-4QV-1

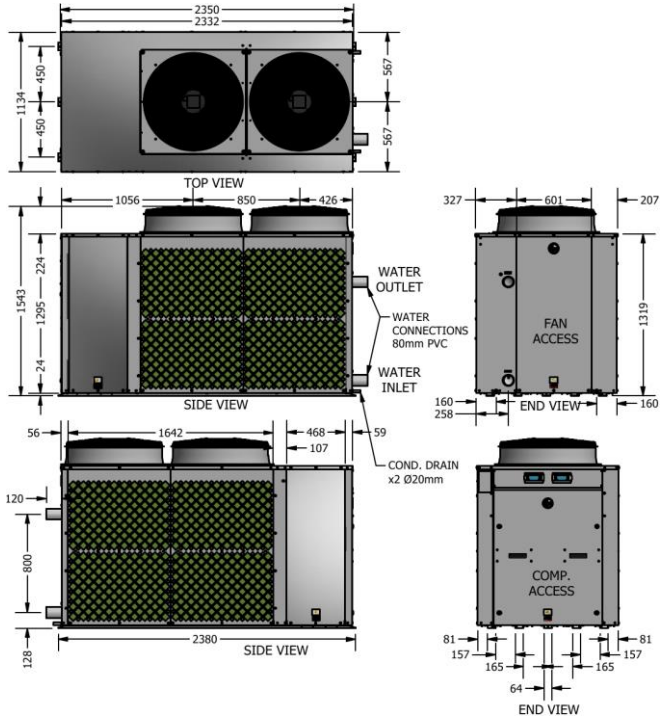

RHEEM A2W 203kW – Vertical Discharge
RTHP203YT-4QV-1

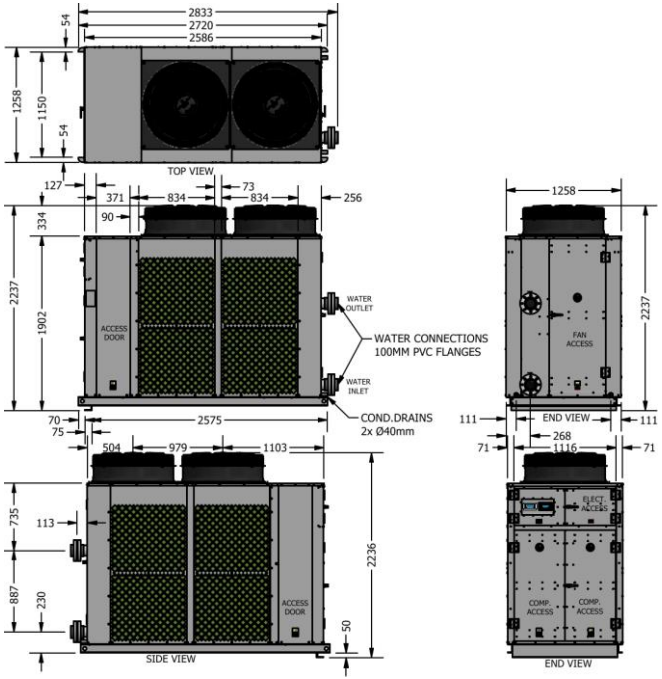

INSTALLATION

Dimensions and Technical Data – 250kW Models

RHEEM A2W 250kW – Vertical Discharge
RTHP250YT-4QV-1

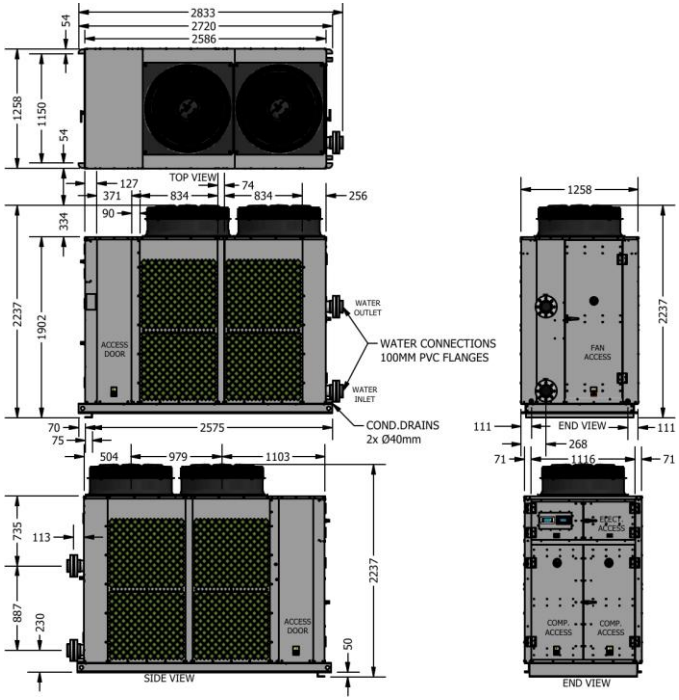

INSTALLATION

CLEARANCES

Sides	Unit	67kW Models	98kW Models	133kW Models	203kW Models	250kW Models
Evaporator Coil Side	mm	1000	1000	1000	1000	1000
Back (vertical discharge models)	mm	100	100	1000	1000	1000
Back (horizontal discharge models)	mm	3500	3500	N/A	N/A	N/A
Display Side	mm	850	850	850	850	850
Water Connections Side	mm	850	850	850	850	850
Top (vertical discharge models)	mm	3500	3500	3500	3500	3500
Top (horizontal discharge models)		Clearance above unit required for service personnel to stand				

When units are placed side by side, allow 2000mm distance between evaporator coils.

HEAT PUMP ASSEMBLY

POOL HEATER LOCATION

The pool heater is designed for outdoor installation and must not be installed indoors.

The pool heater must not be operated until the system has been filled with water and all valves are in the correct position to permit water flow through the unit.

Clearance must be allowed for correct air flow and for servicing the pool heater, and where multiple heat pumps are to be installed, additional clearances must be provided. Refer to **page 35** for clearance data.

Good performance is obtained when the heat pump is supplied with a constant supply of fresh air. Care should be taken to ensure that walls, eaves, etc. do not cause recirculation of discharge air into the intake air stream of the heat pump which can drastically reduce efficiency and cause excessive icing of the evaporator coil. Failure to observe these recommendations may lead to lower than expected performance or problematic operation of the heat pump.

The pool heater should be installed close to other system equipment like filter, circulating pump, etc. to minimise friction and heat loss, and its position should be chosen with noise, safety and service in mind. Ensure air inlet and fan outlet grilles are clear of obstructions and shrubbery, and that they are unlikely to be touched by people (especially children).

It is advisable to install the pool heater away from bedroom or living room windows as the system can generate a noise of up to 67dBA (at 3 metres from the pool heater) whilst operating, and wherever possible the exhaust air should be directed away from occupied areas.

It is recommended the pool heater be installed at ground or floor level. The pool heater must stand vertically upright and must be installed on a firm base such as a concrete slab. **Note:** to assist with condensate drainage, the heat pump has a 2.5 degrees slope towards the drains. Do not level the product.

The pool heater must be accessible without the use of a ladder or scaffold, and you must be able to read the information on the rating plate. Remember you may have to remove the entire pool heater later for servicing.

The pool heater must not be installed in an area with a corrosive atmosphere, where chemicals are stored or where aerosol propellants are released. Remember the air may be safe to breathe, but the chemicals may attack the materials used in the heat pump system.

HEAT PUMP ASSEMBLY

CIRCULATING PUMP AND PLUMBING REQUIREMENTS

Inadequate or excessive water flow is detrimental to heating efficiency and can cause damage to the heat pump, therefore it is essential that the water circulating pump and system pipe sizes be engineered to suit the particular application to provide the correct water flow rate through the heat pump.

Refer to **page 40** for required flow rates and manifold and branch line sizing information. The circulating pump must be sized to provide the required flow rate as a minimum.

A separate plumbing circuit with designated heat pump flow and return lines and a designated circulating pump (with filter/strainer) controlled by the heat pump is generally the most desirable plumbing configuration. However, this may not always be possible particularly with established pools, and the heat pump may be plumbed in-line with the existing filtration system and utilise the existing filtration pump as the circulating pump. *In this instance the filtration pump must be operating for the heat pump to operate.*

If the heat pump is to be plumbed in-line with the existing filtration system, thought must also be given to correct water flow rate, run time and possible over chlorinating and/or chemical dosing by the extended running of automatic chlorinator, feeders, etc.

The plumbing diagrams starting on **page 27** detail typical plumbing diagrams for various applications including multiple heat pump applications.

The following plumbing requirements must be observed for all installations:

- The circulating pump **MUST** be installed on the inlet line to the heat pump.
- Connection unions **MUST** be installed at each heat pump to enable each heat pump to be disconnected for servicing and drain down.
- If the heat pump is installed below the pool water level, or is part of a multiple heat pump installation, inlet and outlet water isolation valves **MUST** be installed (at each heat pump) to enable the heat pump to be isolated for servicing. Note for single heat pump installations: If the circulating pump is also installed below the pool water level, the inlet isolation valve may be installed before the pump to also enable the pump to be isolated for servicing.
- An external bypass with an adjustable bypass (balancing) valve **MUST** be installed to facilitate adjustment of the flow rate through the heat pump(s). The bypass valve must a ball valve type (not gate valve).
- Automatic chemical dosing devices, including salt chlorinators may be installed in the heat pump plumbing, however they **MUST** be installed downstream of the heat pump (in the outlet/return line), and a non-return

valve **MUST** be installed after the heat pump to prevent chemical back flow into the heat pump when the circulating pump is shut off. Multiple heat pump (manifold) installations must have these components installed in the return line after the last heat pump.

- For single heat pump installations, size circulating pump and branch lines according to flow rate and branch line sizes on **page 40.**
- Multiple heat pumps **MUST** be installed using Equa-Flow® / Tichlemann principles to ensure the demand on each heat pump in the bank is the same as any other. Refer to 'Manifold Installations' on **page 39**.

MANIFOLD INSTALLATIONS

MANIFOLDING – MULTIPLE HEAT PUMP INSTALLATIONS
The manifold plumbing diagrams starting on **page 29** detail typical plumbing diagrams for various multiple heat pump applications.

In order for systems with two or more heat pumps to operate correctly, the water flow through all heat pumps must be the same.

Multiple heat pumps **MUST** be installed using Equa-Flow® / Tichlemann principles to ensure the demand on each heat pump in the bank is the same as any other. To achieve this, there are basic installation requirements and principles which must be followed:

1. The circulating pump and plumbing requirements starting on **page 37** must be observed.
2. All heat pumps must be the same model and plumbed in parallel.
3. The **inlet** flow manifold must be designed to balance the flow to each heat pump i.e. each branch line must be the same diameter and length.
4. The **outlet** return manifold must be designed to balance the flow from each heat pump i.e. each branch line must be the same diameter and length.
5. The first heat pump in must be the last heat pump out.
6. The return line from the return manifold must leave from the opposite end to which the flow line enters the flow manifold.
7. The flow line, flow and return manifolds and return line must be sized to meet the requirements of the application.
8. All fittings, valves and branch lines must be matched sets all the way along the manifold.
9. Sufficient space must be left to enable access, servicing or removal of any pool heater and the additional clearance requirements for multiple heat pump installations must be met. Refer to **page 35** for clearance data.
10. Circulating pump and manifold and branch lines must be sized according to manifold and branch sizing information on **page 40**.

MANIFOLD INSTALLATIONS

Manifold And Branch Sizing

Pipe sizing should be carried out by persons competent to do so, choosing the most suitable pipe size for each individual application in consideration with friction loss that may occur due to long runs or excessive bends. Reference to pool heater specifications and local regulatory authority requirements must be made. The following table details the minimum flow rate required and the minimum manifold and branch line sizes for each heat pump.

Model	**67kW**	**98kW**	**133kW**	**203kW**	**250kW**
Min Flow Rate Required (L/s)	5.0	7.5	10.0	15.0	18.0
Branch Lines (mm)	50 (40*)	80	80	100	100
Flow Manifold (mm)	50 (40*)	80	80	100	100
Return Manifold (mm)	50 (40*)	80	80	100	100

* Retrofit of existing installations only.

CONNECTIONS – PLUMBING

CONNECTION SIZES

Model	67kW 98kW	133kW	203kW 250kW
Water inlet (PVC male mm I.D)	50	80	100
Water outlet (PVC male mm I.D)	50	80	100
Condensate drain (mm O.D)	20	40	40

All plumbing work must be carried out by a qualified person and in accordance with the Plumbing Standard AS/NZS 3500.4 and local authority requirements.

WATER INLET AND OUTLET

Pipe work must be cleared of foreign matter before connection and purged before attempting to operate the pool heater. All PVC pipe joins must be deburred, cleaned, primed and glued using PVC primer and solvent cement suitable for pressure pipe applications. Use silicone grease on unions and screwed fittings.

- Connection unions **MUST** be installed at each heat pump to enable each heat pump to be disconnected for servicing and drain down.
- If the heat pump is installed below the pool water level, or is part of a multiple heat pump installation, inlet and outlet water isolation valves **MUST** be installed (at each heat pump) to enable the heat pump to be isolated for servicing. Note for single heat pump installations: If the circulating pump is also installed below the pool water level, the inlet isolation valve may be installed before the pump to also enable the pump to be isolated for servicing.

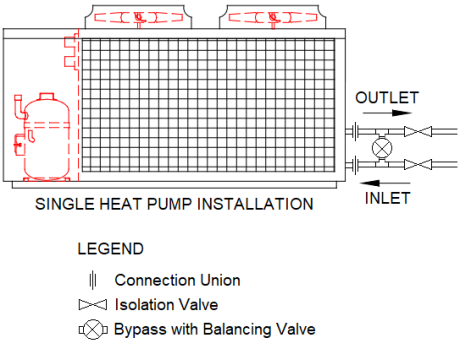

- For single heat pump applications, an external bypass with an adjustable bypass (balancing) valve **MUST** be installed across the inlet and outlet connections to facilitate adjustment of the flow rate through the heat pump.
- For multiple heat pump applications, a single external bypass with an adjustable bypass (balancing) valve **MUST** be installed across the inlet and

outlet manifolds (not heater inlet and outlet connections) to facilitate adjustment of the flow rate through the heat pumps.

Refer to circulating pump and plumbing requirements on **page 37** for more information.

PIPE SIZES

Pipe sizing should be carried out by persons competent to do so, choosing the most suitable pipe size for each individual application in consideration with friction loss that may occur due to long runs or excessive bends. Reference to pool heater specifications and local regulatory authority requirements must be made.

Refer to manifold and branch sizing on **page 40** for more information.

CONDENSATE DRAIN

A drain line must be fitted to the condensate drains to carry any discharge clear of the pool heater. The drain line can be extended using 20 mm O.D (67kW and 98kW models) or 40mm O.D (133kW, 203kW and 250kW models) rigid hose or conduit. The drain line pipe work must be UV resistant or protected from sunlight. The outlet of the drain line must be in such a position that flow out of the pipe can be easily seen, but arranged so water discharge will not cause damage or nuisance. The pool heater is supplied with fall, and it is recommended to install the pool heater with a slight fall towards the condensate drain.

The condensate drain must not be connected to a pressure relief or expansion control valve drain line but may discharge at the same point.

CONNECTIONS – ELECTRICAL

The power supply to the pool heater must not be switched on until the pool heater is filled with water and a satisfactory megger reading is obtained.

MEGGER READING
When a megger test is conducted on this pool heater, then the following should be noted:

⚠ **Warning:** This pool heater contains electronic equipment, and 500 V insulation tests must only be conducted between actives and earth and between neutral and earth. An active to neutral test WILL damage the electronics.

An insulation test result of above 1 MΩ should be obtained for this pool heater.

ELECTRICAL CONNECTION
All electrical work and permanent wiring must be carried out by a qualified person and in accordance with the Wiring Rules AS/NZS 3000 and local authority requirements. Ensure cabling will not be subject to wear, corrosion, excessive pressure, vibration, sharp edges or any other adverse environmental effects. The check shall also take into account the effects of aging or continual vibration from sources such as compressors or fans.

HEAT PUMP
The heat pump pool heater must be directly connected to a 30mA RCD protected 380 - 415 V AC 50/60 Hz mains power supply. The heat pump must be on its own circuit with an appropriately sized circuit breaker and isolating switch installed at the switchboard. A secondary isolating switch must be installed within reach of the pool heater. Refer to **page 44** for electrical data.

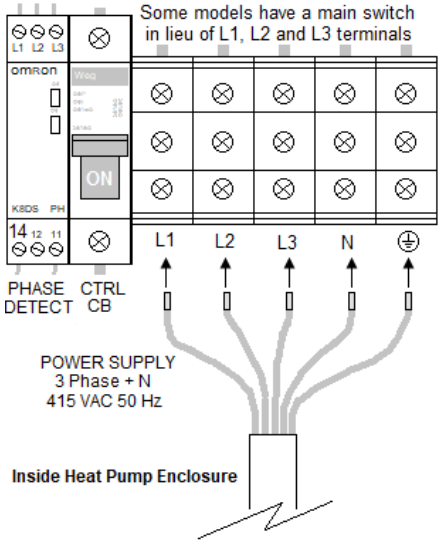

A conduit is required for the electrical cable to the heat pump pool heater. The conduit is to be connected to the unit with a 20mm terminator. Holes are provided on the electrical panel for cabling.

Connect the power supply and earth wires directly to the terminal block (main switch for 133kW, 203kW and 250KW models), ensuring there are no excess wire loops inside the electrical enclosure. Correct phase connection is required.

CONNECTIONS - ELECTRICAL

Electrical Data Table					
Model	**67kW**	**98kW**	**133kW**	**203kW**	**250kW**
Electrical Connection	3 Phase / 380-415 Volts / 50/60 Hz				
Max Current per Phase (running, excluding pump)	26.4 A	35.6 A	48.8 A	73.9 A	106.0 A
Minimum CB Size (excluding pump*)	32 A	40 A	65 A	80 A	125 A

* Where the heat pump has its own circulating pump that is electrically connected to the heat pump 'PUMP' contactor, the maximum pump switching capacity is 9A (AC3). If the pump exceeds this capacity, then the heat pump 'PUMP' contactor output must be used as a switch to control an external contactor of a suitable rating.

CIRCULATING PUMP

Some systems may utilise the existing pool filtration system circulating pump which is not controlled by the pool heater. In this instance, a pump connection to the pool heater is not required.

For systems where the circulating pump is to be controlled by the pool heater, power to the circulating pump is supplied from the pool heater. The pump can be a single phase 240 VAC pump or a three phase 415 VAC pump.

Single Phase Circulating Pump

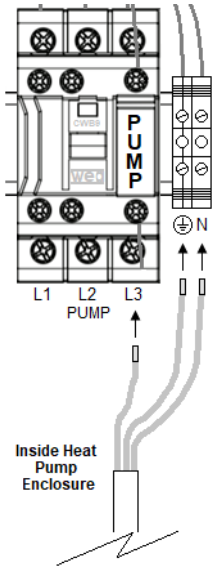

Use 'L3', 'N' and Earth '⏚'.

Three Phase Circulating Pump

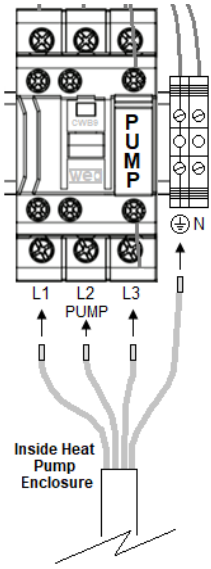

Use 'L1', 'L2', 'L3', and Earth '⏚'.

CONNECTIONS - ELECTRICAL

A 20 mm conduit is required for the electrical cable between the pool heater and pump. The conduit is to be connected to the pool heater with a 20 mm terminator and holes are provided on the electrical panel for cabling.

Connect the circulating pump active, neutral and earth wires to the pool heater “PUMP” terminals located within the heat pump electrical enclosure.

REMOTE ON/OFF CONTROL

If remote on/off control of the heat pump by a third party control device is required, connect the control device volt free switch wiring to the pool heater “REMOTE ON/OFF” terminals located within the heat pump electrical enclosure.

VF-VF control device volt free switch closed = Heat pump off.
VF-VF control device volt free switch open = Heat pump on.

⚠ **Volt free connection only – Do not apply a voltage. Any resultant faults caused by applying a voltage to volt free terminals will not be covered by the Rheem warranty.**

Note: Maximum cable length is 30 meters using telephone cabling or 200 meters using AWG24 shielded cable.

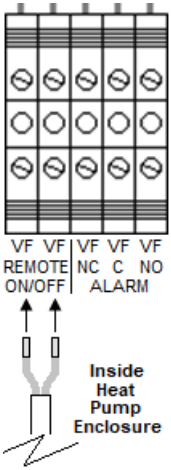

REMOTE ALARM

If remote alarm indication is required, connect the alarm volt free wiring to the pool heater “ALARM” terminals located within the heat pump electrical enclosure.

VF NC = Volt free normally closed (opens on alarm)
VF C = Volt free common
VF NO = Volt free normally open (closes on alarm)

⚠ **Volt free connection only – Do not apply a voltage. Any resultant faults caused by applying a voltage to volt free terminals will not be covered by the Rheem warranty.**

Note: Maximum cable length is 30 meters using telephone cabling or 200 meters using AWG24 shielded cable.

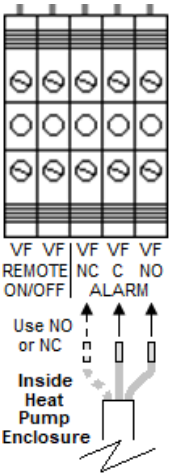

CONNECTIONS - ELECTRICAL

POWER METER KIT CT INSTALLATION

Models fitted with an optional power meter kit have three pre-wired current transformers (CTs) that must be installed around the incoming three phase power supply wires to the heat pump during installation.

The CTs are located inside the heat pump electrical enclosure below the power supply connections.

Each CT is labelled “1”, “2” or “3” and has a current flow direction arrow on the bottom of the CT. **The arrow must point towards the heat pump power supply connections.**

Open CT clamp by levering open with a flat bladed screwdriver, position CT around incoming phase wire and snap clamp shut. Ensure there is only one wire inside each CT.

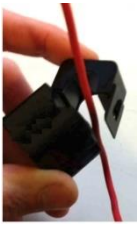

CT1 around “L1” wire, CT2 around “L2” wire and CT3 around “L3” wire as depicted opposite.

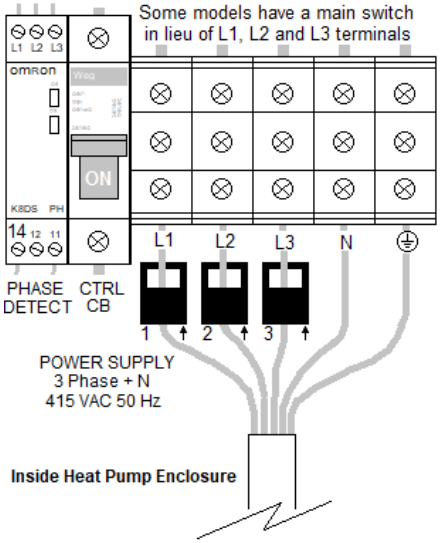

BUILDING MANAGEMENT SYSTEMS (BMS/BAS)

Each heat pump that does not have a power meter kit option fitted can be connected to a BMS or BAS system via interface cards (Modbus RS485 or BACnet MS-TP or BACnet TCP/IP Ethernet), available as an accessory.

For 67kW or 98kW heat pumps that do not have a power meter kit option fitted, Modbus RS485 is provisioned on the controller and can be used for BMS connection without any additional interface cards when each heat pump is directly connected to the BMS.

Modbus RS485, BACnet MS-TP or BACnet TCP/IP Ethernet interface cards, supplied by Rheem as an accessory, are required for any other configuration.

Continued on next page

CONNECTIONS - ELECTRICAL

If an interface card is required, it plugs into the Rheem IQ controller (PCB) as depicted opposite.

Each heat pump must have its own BMS card and connection.

If required, insert the BMS card into the connector for each heat pump, taking care that the card is firmly placed as shown in red circle.

CONNECTIONS - ELECTRICAL

67KW HEAT PUMP WIRING DIAGRAM – WITHOUT POWER METER KIT

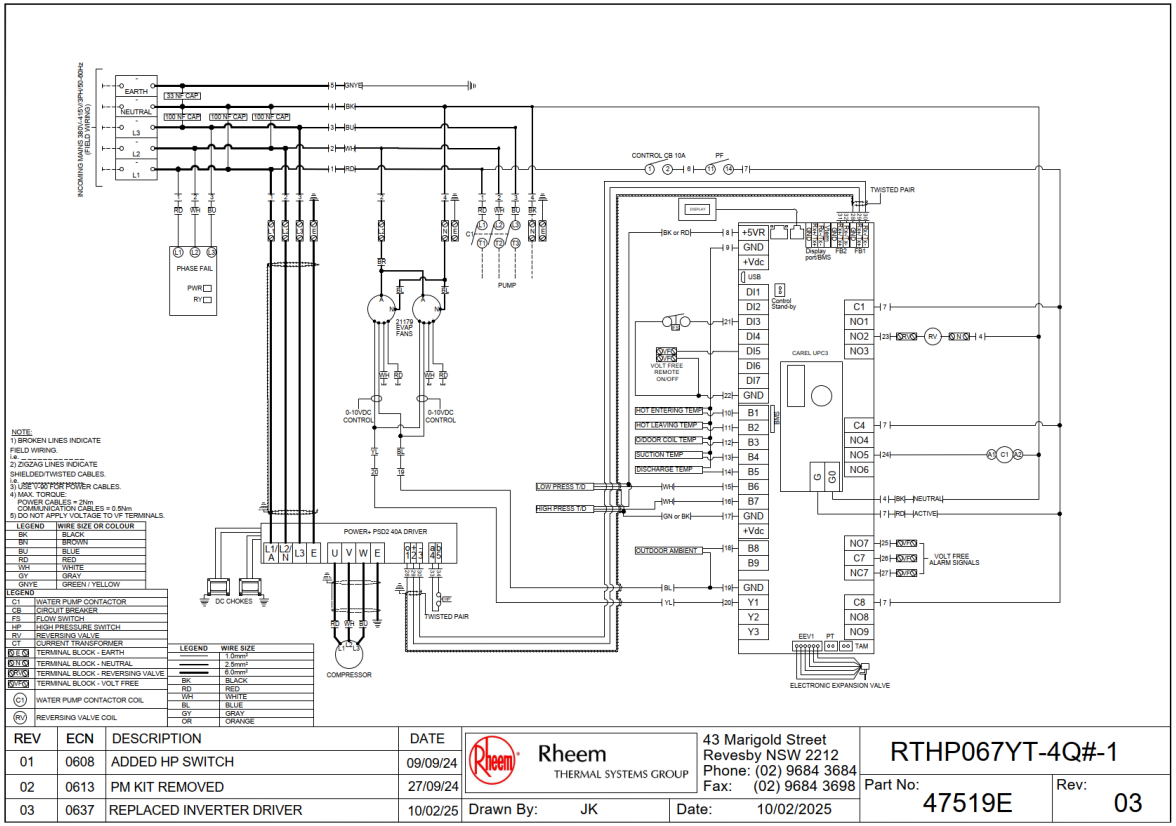

REV	ECN	DESCRIPTION	DATE
01	0608	ADDED HP SWITCH	09/09/24
02	0613	PM KIT REMOVED	27/09/24
03	0637	REPLACED INVERTER DRIVER	10/02/25

Rheem THERMAL SYSTEMS GROUP

43 Marigold Street
Revesby NSW 2212
Phone: (02) 9684 3684
Fax: (02) 9684 3698

Drawn By: JK
Date: 10/02/2025

RTHP067YT-4Q#-1

Part No: 47519E

Rev: 03

CONNECTIONS - ELECTRICAL

67KW HEAT PUMP WIRING DIAGRAM – WITH POWER METER KIT

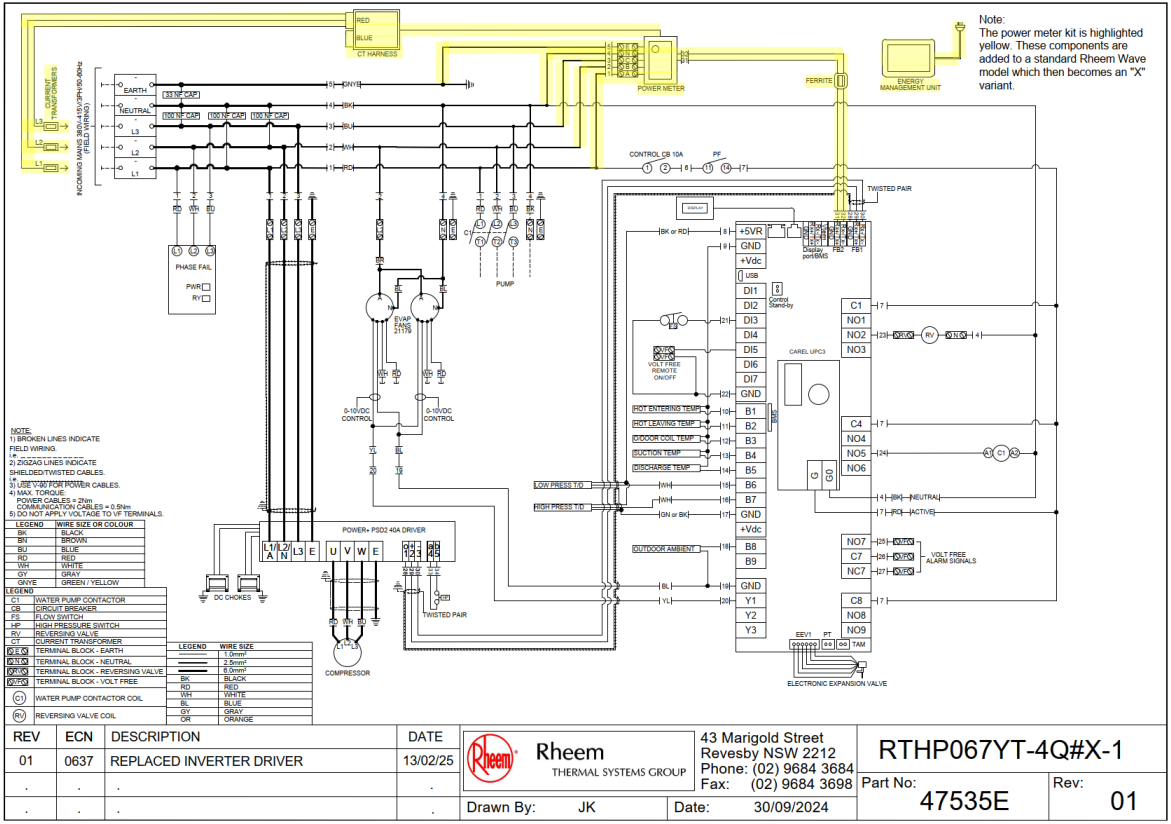

CONNECTIONS - ELECTRICAL

98KW HEAT PUMP WIRING DIAGRAM – WITHOUT POWER METER KIT

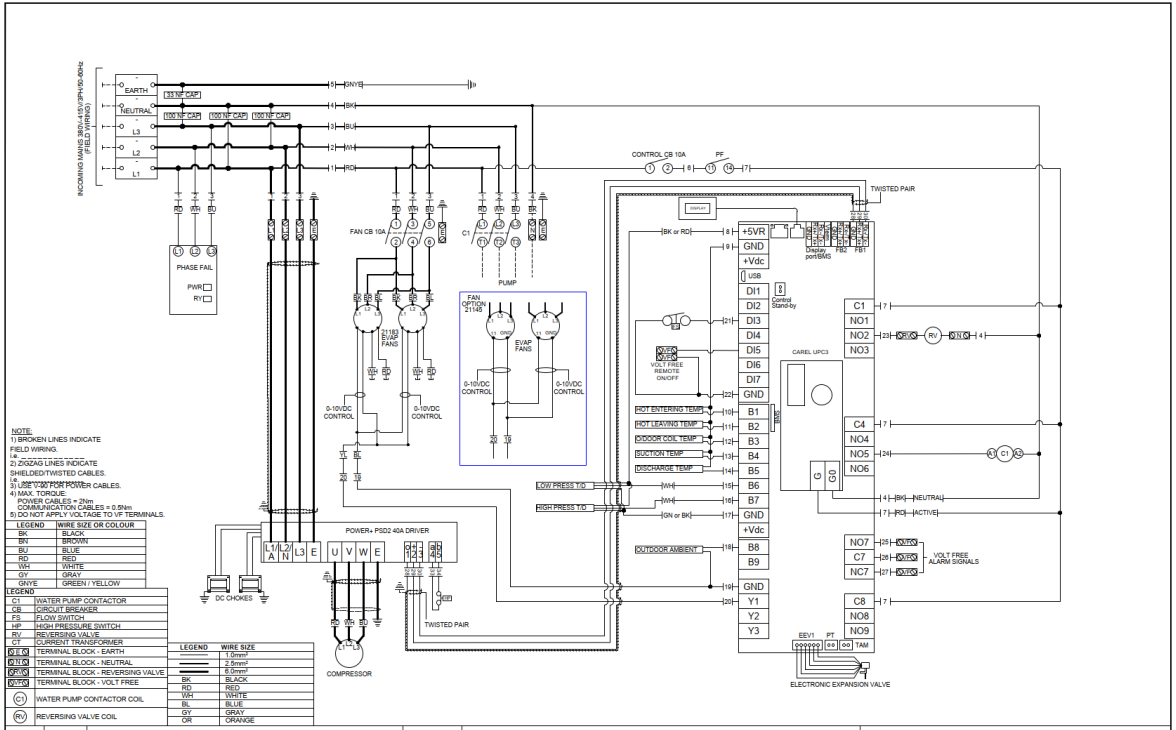

REV	ECN	DESCRIPTION	DATE
01	0608	ADDED HP SWITCH, FAN CB	09/09/24
02	0613	FAN CB LABEL UPDATED, REMOVED PM KIT	27/09/24
03	0637	ADDED FAN OPTION & REPLACED INV. DRIVER	10/02/25

Rheem THERMAL SYSTEMS GROUP

43 Marigold Street
Revesby NSW 2212
Phone: (02) 9684 3684
Fax: (02) 9684 3698

Drawn By: JK
Date: 10/02/2025

RTHP098YT-4Q#-1

Part No: 47522E

Rev: 03

CONNECTIONS - ELECTRICAL

98KW HEAT PUMP WIRING DIAGRAM – WITH POWER METER KIT

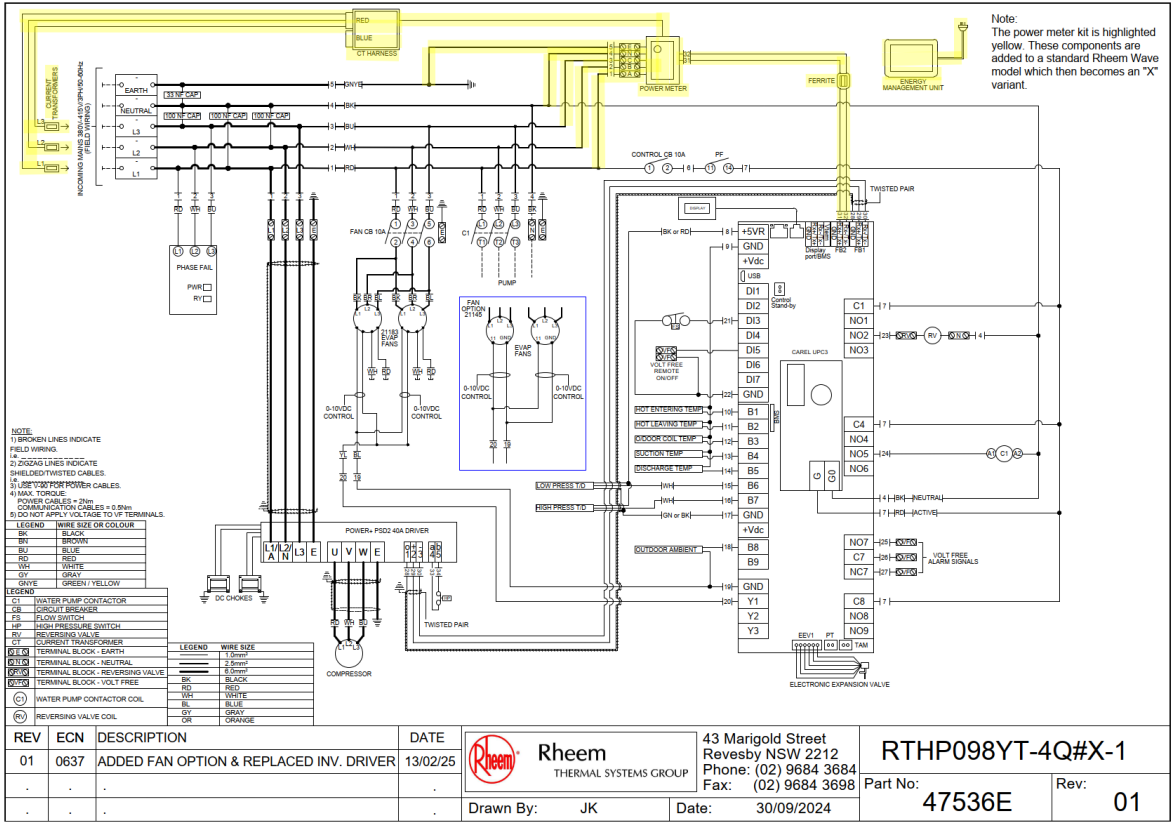

CONNECTIONS - ELECTRICAL

133KW PUMP WIRING DIAGRAM – WITHOUT POWER METER KIT

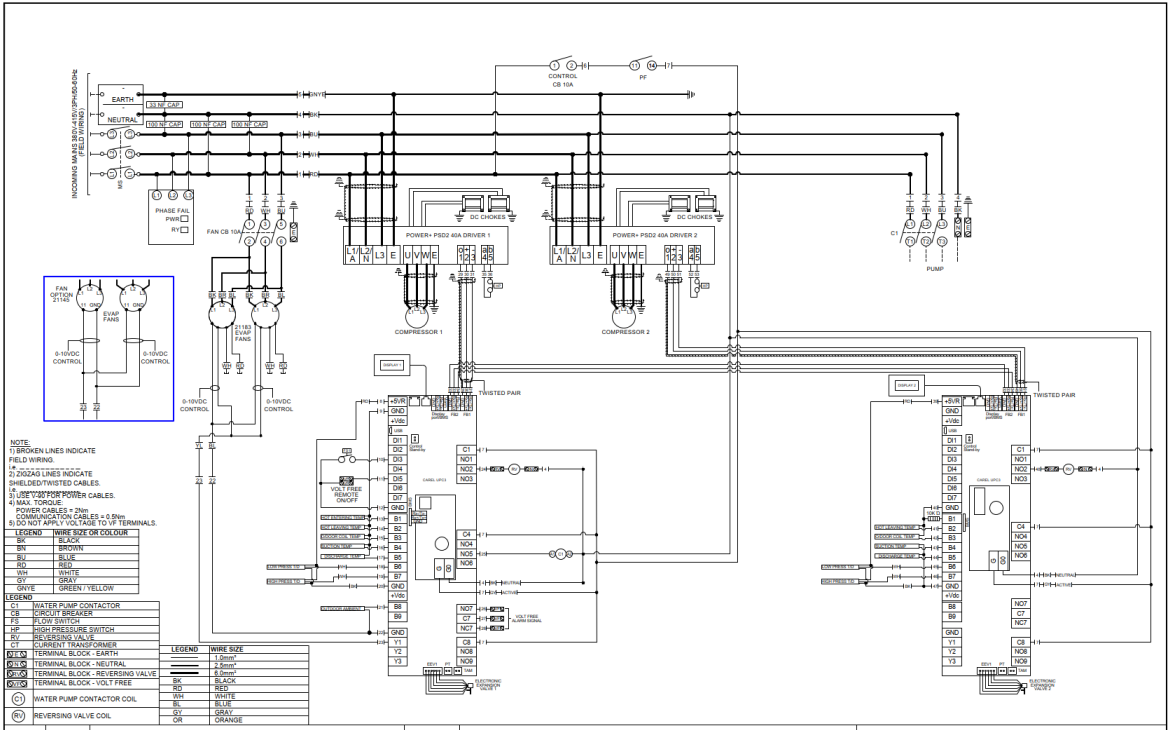

REV	ECN	DESCRIPTION	DATE
02	0613	FAN CB LABEL UPDATED, REMOVED PM KIT	27/09/24
03	0620	ADDED DISPLAY 2	07/11/24
04	0637	ADDED FAN OPTION & REPLACED INV. DRIVER	10/02/25

Rheem THERMAL SYSTEMS GROUP

43 Marigold Street
Revesby NSW 2212
Phone: (02) 9684 3684
Fax: (02) 9684 3698

Drawn By: JK
Date: 10/02/2025

RTHP133YT-4QV-1

Part No: 47528E

Rev: 04

CONNECTIONS - ELECTRICAL

133KW PUMP WIRING DIAGRAM – WITH POWER METER KIT

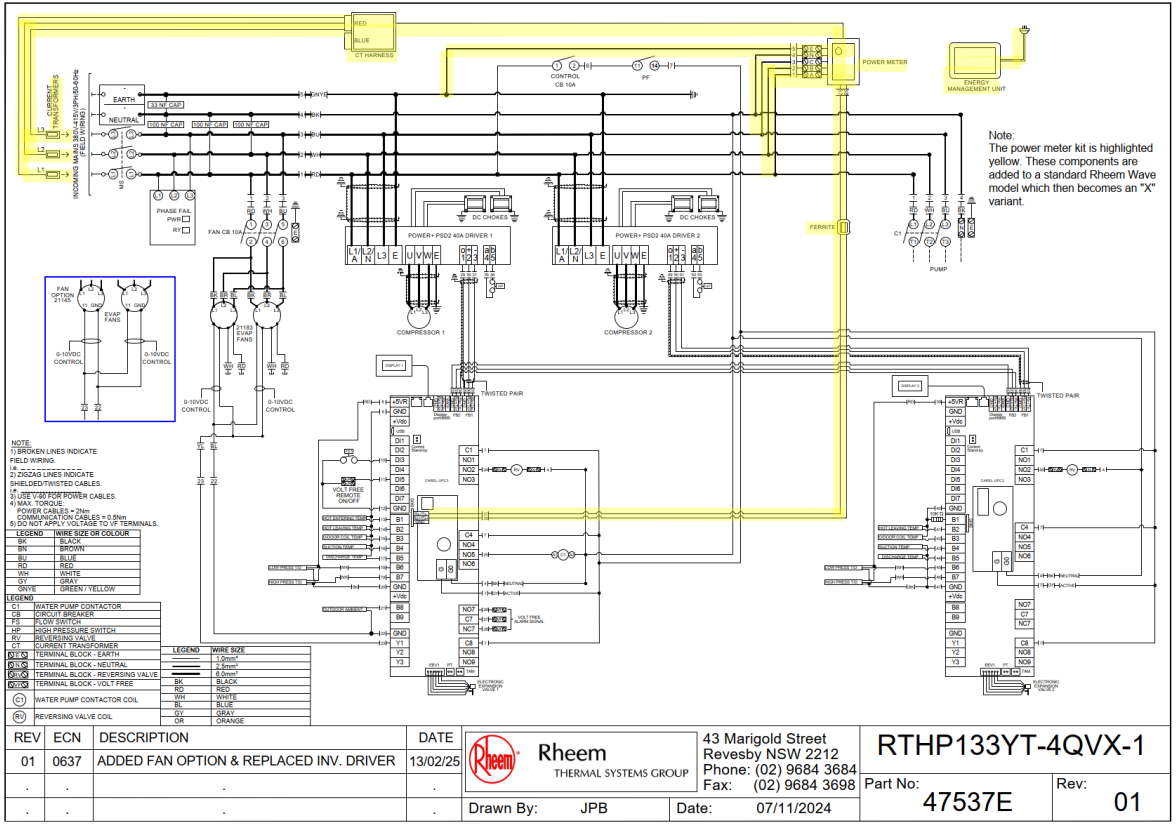

CONNECTIONS - ELECTRICAL

203KW HEAT PUMP WIRING DIAGRAM – WITHOUT POWER METER KIT

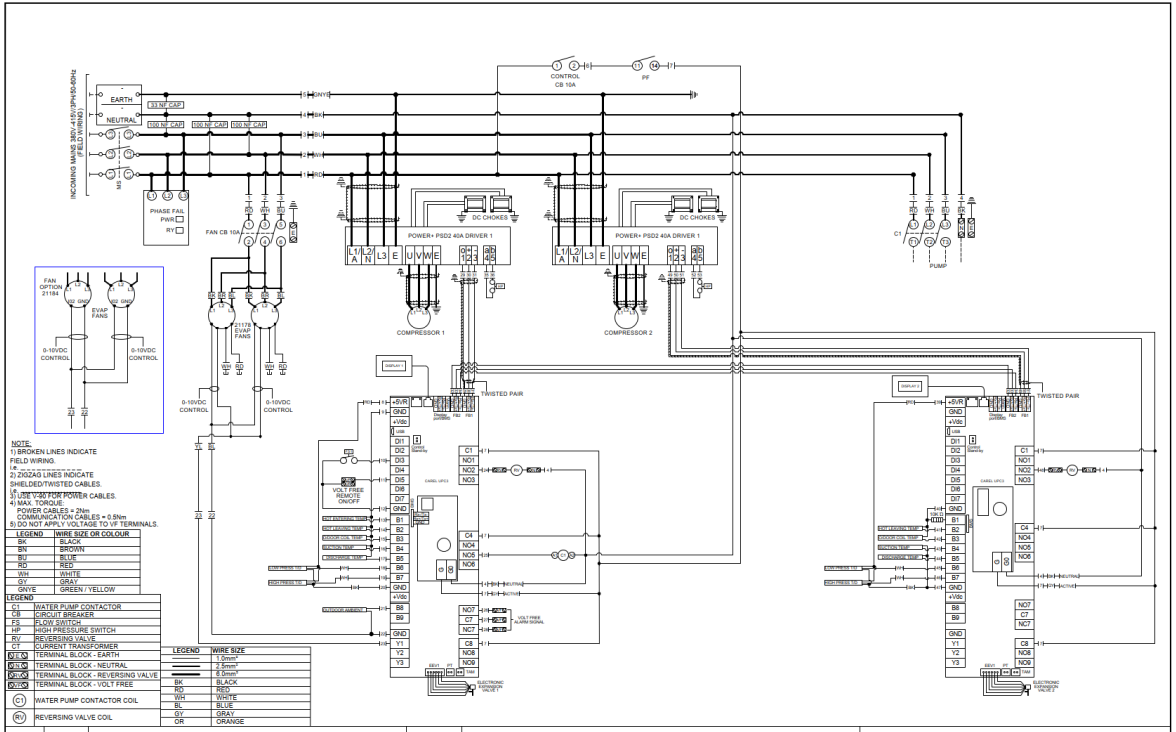

REV	ECN	DESCRIPTION	DATE
02	0613	FAN CB LABEL UPDATED, REMOVED PM KIT	27/09/24
03	0620	ADDED DISPLAY 2	07/11/24
04	0637	ADDED FAN OPTION & REPLACED INV. DRIVER	10/02/25

Rheem THERMAL SYSTEMS GROUP

43 Marigold Street
Revesby NSW 2212
Phone: (02) 9684 3684
Fax: (02) 9684 3698

Drawn By: JK
Date: 10/02/2025

RTHP203YT-4QV-1

Part No: 47524E

Rev: 04

CONNECTIONS - ELECTRICAL

203KW HEAT PUMP WIRING DIAGRAM – WITH POWER METER KIT

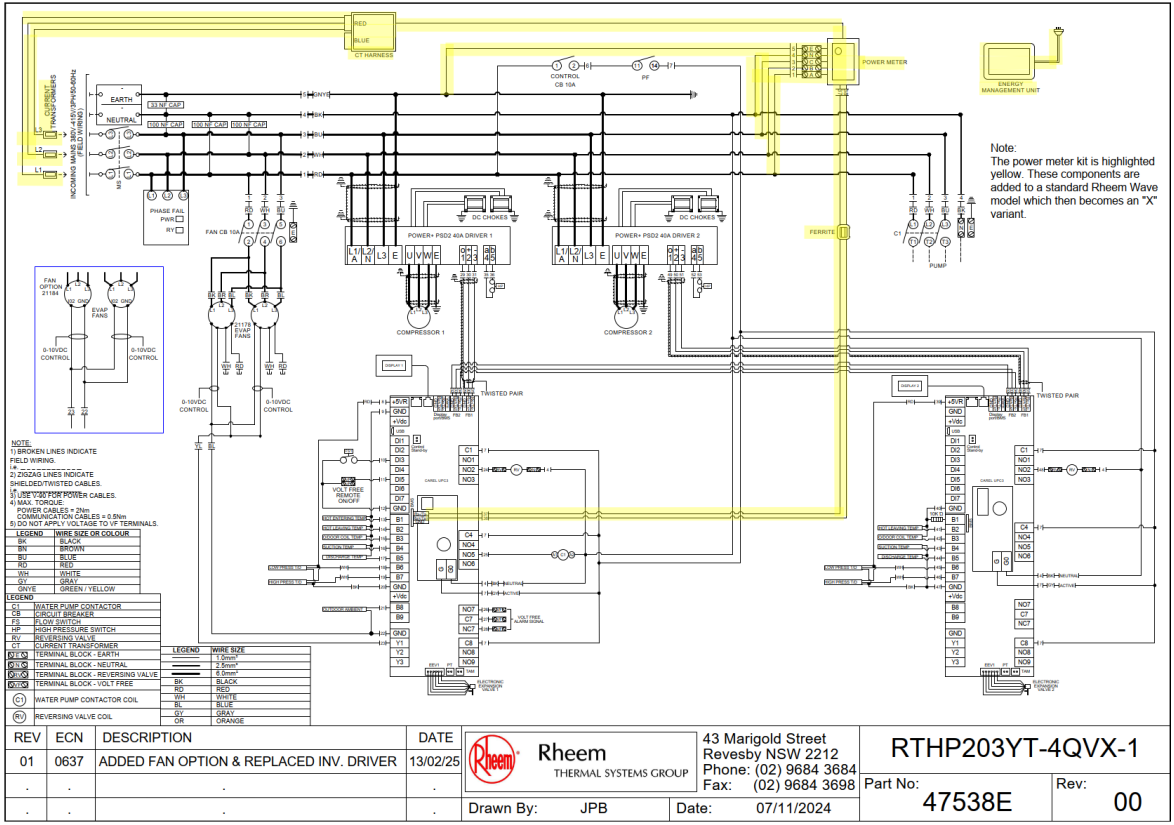

REV	ECN	DESCRIPTION	DATE
01	0637	ADDED FAN OPTION & REPLACED INV. DRIVER	13/02/25
.	.	.	.
.	.	.	.

Rheem THERMAL SYSTEMS GROUP

43 Marigold Street
Revesby NSW 2212
Phone: (02) 9684 3684
Fax: (02) 9684 3698

Drawn By: JPB
Date: 07/11/2024

RTHP203YT-4QVX-1

Part No: 47538E

Rev: 00

CONNECTIONS - ELECTRICAL

250KW HEAT PUMP WIRING DIAGRAM – WITHOUT POWER METER KIT

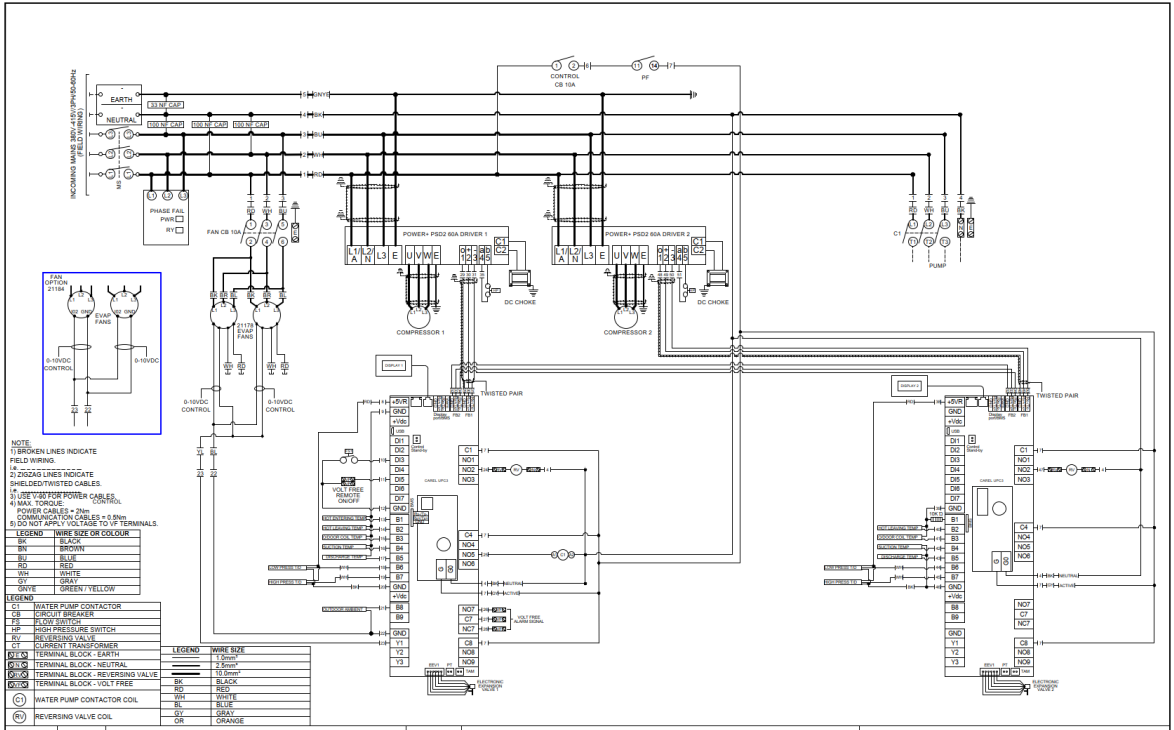

REV	ECN	DESCRIPTION	DATE
02	0613	FAN CB LABEL UPDATED, PM KIT REMOVED	27/09/24
03	0620	ADDED DISPLAY 2	07/11/24
04	0637	ADDED FAN OPTION	10/02/25

Rheem THERMAL SYSTEMS GROUP

43 Marigold Street
Revesby NSW 2212
Phone: (02) 9684 3684
Fax: (02) 9684 3698

Drawn By: JK
Date: 10/02/2025

RTHP250YT-4QV-1

Part No: 47520E

Rev: 04

CONNECTIONS - ELECTRICAL

250KW HEAT PUMP WIRING DIAGRAM – WITH POWER METER KIT

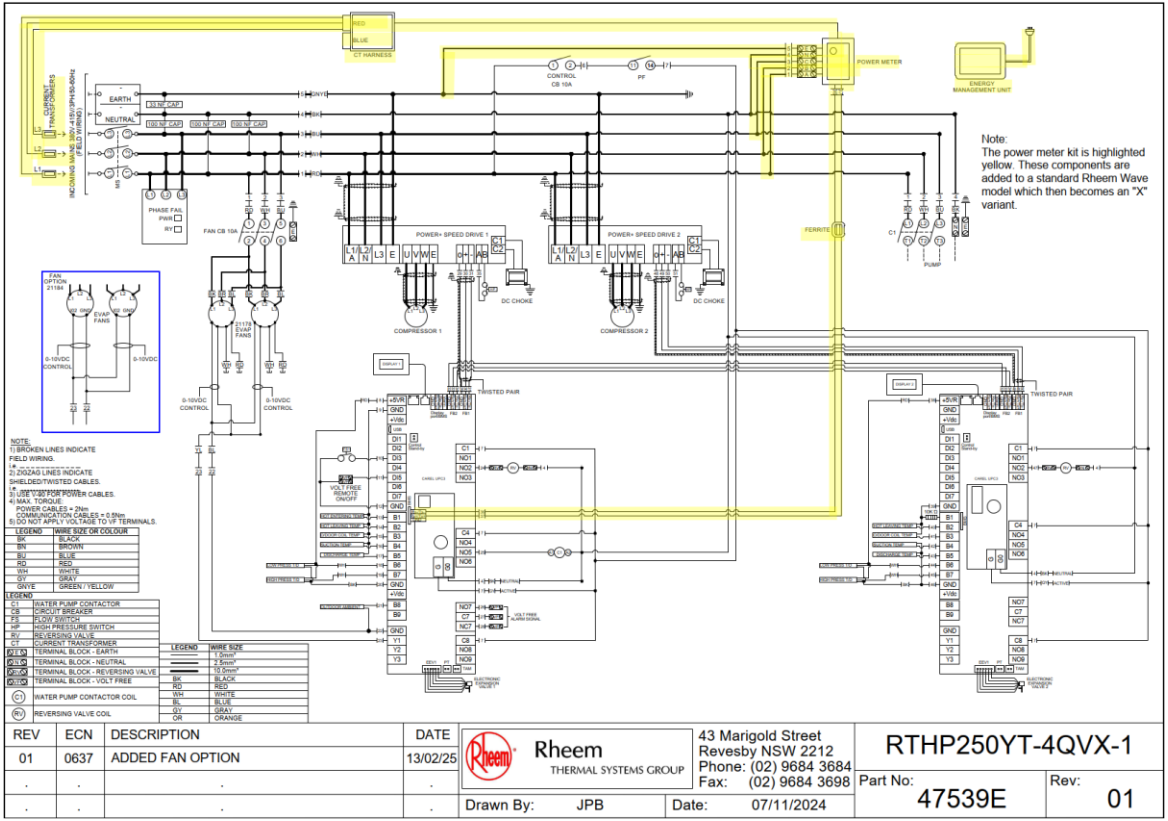

CONNECTIONS - ELECTRICAL

CONTROLLER AND DISPLAY INFORMATION

Rheem parameter sheets 0111, 0112, 0113, 0114, 0115
A2WHC Software V2.0.3

START Tap *Esc* to enter main menu (greyed)

A. On/Off Unit
- **01** On/Off control
- **02** Type of pump control

Alternative setpoint quick view or adjustment
- Tap *Prog* to view or change setpoint
- **01** Setpoint adjust → **06** Active setpoint & diff

B. Setpoint
- **01** Setpoint adjust
- **06** Active setpoint & diff
- **07** Beast mode engage (Yes/No) Current state (idle, beast mode, night mode, heating mode, cooling mode)

C. Clock/Scheduler
- **01** Set day/date/hour Enable scheduler Enable tariff Enable night mode Timezone
- **07** Beast mode engage (Yes/No) Current state (idle, best mode, night mode, heating mode, cooling mode)

D. Input/Output (information only)
- **01** Hot enter temp Hot leave temp
- **02** (comp 1 info) Low pressure Sat suction temp Suction temp High pressure Sat condenser temp Outdoor coil temp Comp dischg temp
- **03** LP1 switch state HP1 switch state Comp 1 O/L state
- **04** Unit status state Flow switch state Remote on/off state DRED status
- **05** Compressor state Rev. valve state Fan speed Circ pump state
- **10** Outside temp
- **11** (Input/output info) Digital inputs (1~7) Relay outputs (1~9)

E. Alarm History (information only)
- Displays the last 64 alarms with a page for each alarm (AL*01 ~ AL*64 screens). Each page details alarm fault code, time, date, and any other relevant information according to alarm fault code

F. Board Switch
- Not used for A2WHC

G. Service (password 0022)
- **A. Change Display** Select language
- **B. Information** (Firmware, software, board type/size, core, UID, ret mem writes, main task, blackout info, power off time, length last time off)
- **C. Summer/Winter** (Cannot access)
- **D. Working Hours** Circ pump hrs Compressor 1 hrs Outdoor fan 1 hrs
- **E. BMS Config** **BMS2:** (protocol, address, baudrate, stopbits, parity) **BMS Card:**(protocol, address, baudrate, stopbits, parity) **NET Configuration:** (enable DHCP/ AutoIP) **pGDX:** (IP address) **Remote On/Off:** (No)
- **F. Service Settings** → Go to 'Service Settings Screen Parameter Settings Table'
- **G. Manual Manage**
  - **01** Circ pump (**Auto**/off/on) Comp enabled (**yes**/no) Reverse Vlv (**Auto**/off/on) Cond fan 1 (**Auto**/off/on)
  - **01b** Boost Heat (**Auto**/off/on)
  - **03** Reset off/on/auto over rides (**no**/yes)
  - **04** Speed up timers (**no**/yes)
  - **05** Manual initialise de-ice cycle for comp 1 (**no**/yes)

H. Manufacturer (password 7874)
- **A. Configuration** (config parameters)
- **B. I/O Configuration** (I/O config parameters) → Go to 'Manufacturer Screen Parameter Settings Table'
- **C. Factory Settings** (Enable unit on/off) By digital input (yes/**no**) By supervisor (yes/**no**) By flow switch (yes/**no**) Enable tariff time zone management (yes/**no**)
- **D. Initialization** **Alarm:** (delete logs, clear auto reset counters, enable buzzer) **Default Installation:** (wipe retain memory, wipe NVRAM memory, wipe both memory) **Unit configuration:** (Params import/export) **SUnit Configuration:** (alarm export)
- **E. Input/output Test** **I/O test:** (for future use) **User interface:** (UOM) **Web interface:** (UOM)

Default C.Factory Settings shown in brackets in bold

I. Logout (tap ↵ to log out)

EVD 1 Compressor Compressor cooling capacity, temps & pressure → **EEV 1 Circuit** Ostp, status, protection, suction SH → **Inputs** (EEV no1 probes value) S1, S2, S3 & S4 → **Compressor Reg** (Forced stop cmd, power rqd, comp speed, comp can stop/start in X sec) → **Operation Data** (Suction & discharge, envelope zone, alarm countdown, suction & discharge gas temps, press diff/ratio, low PD countdown) → **Drive Data** (Motor current & voltage, DC bus voltage, drive temp, motor power, drive status, No fault) → **EEV Control** (Discharge temp & SH, suction SH, EEV regulation mode, actual working mode

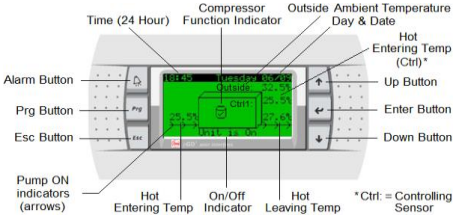

Control Panel Operation Quick Guide

Tap Esc to enter main menu (from home screen)
Tap ↑ or ↓ to highlight desired main menu screen
Tap ↵ to enter highlighted main menu screen
Tap ↑ or ↓ to navigate to desired parameter screen
Tap ↵ to move curser to desired parameter
Tap ↑ or ↓ to change parameter
Tap ↵ to accept new parameter setting
Tap Esc to navigate back one screen
Repeatedly tap Esc to navigate back to home screen

CONNECTIONS - ELECTRICAL

Notes: If no keys are touched for 60 seconds, screen reverts to home screen and any changes made and not confirmed will be lost.

Set Point Quick Setting

Tap **'Prg'** from the Main control panel home screen and the Setpoint page will appear. Tap **'ente**r' to access change. Tap **'up'** or **'down'** to adjust the setting in 0.1 increments. Touch and hold for rapid change. Tap **'enter'** to confirm. Tap **'Esc'** to return to the home screen. The factory setting is 27ºC. The set point can be adjusted from 23ºC up to 38ºC.

Menu Item

A. **01 - On/Off** – Tap **'enter'** to access change. Tap **'up'** or **'down'** to turn unit on or off. Tap **'enter'** to confirm.

   02 - Tap **'down'** to display type of circulating pump control.
   Default: PERMANENT.
   Tap **'Esc'** to return to Menu Master.

B. **01 - Set Point** – Displays the pool set point at which the compressor will be deactivated. Tap **'ente**r' to access change. Tap **'up'** or **'down'** to adjust the setting in 0.1 increments. Touch and hold for rapid change. Tap **'enter'** to confirm.

   06 - Active Set Point and Diff – Displays active set point and differential.

   07 - Beast Mode Engage – Operates the compressor at maximum speed until the set point is reached at which time the compressor turns off and operates as normal thereafter. Tap **'ente**r' to access change. Tap **'up'** or **'down'** to select 'Yes' or 'No'. Tap **'enter'** to confirm.

C. **01 - Clock / Scheduler** – Time and date are set here. Other adjustments include:

   i. **Enable Scheduler:** Default setting 'No' (controls heat pump operating time based on programmed time period). Note: For heat pumps fitted with an optional power meter kit, if this function is required it is performed via the remote monitoring portal instead of via the heat pump control panel.

   ii. **Enable Tariff:** Default setting 'No' (controls heat pump operating time based on tariffs). Note: For heat pumps fitted with an optional power meter kit, if this function is required it is performed via the remote monitoring portal instead of via the heat pump control panel.

   iii. **Enable Night Mode:** Default setting 'No' (limits maximum fan and compressor speeds to reduce noise at night).

iv. **Timezone:** Default setting 'No' (enables time zones to apply to Scheduler, Tariff and Night Mode functions).

The following information details previous Clock / Scheduler functions when set to 'Yes':

i. **Enabling Scheduler** to 'Yes' will open a 2nd page which will allow the user to program specified operating times on a 7-day basis. E.g.:

   Clock Schedule

   Mon 00:00 to 00:00
   Tue 00:00 to 00:00

   Tap the **'down'** key to reveal a 2nd page in the Clock Scheduler:

   Do you want to enable Special Event: Default setting 'No' (programs the temperature to be maintained during a specified date range). Changing the Special Event to 'Yes' allows the user to program the desired date range, set point and differential to be maintained during the Special Event period.

ii. **Enabling Tariff** to 'Yes' will open the Tariff Time Band pages which allows the user to program which hours are off peak, shoulder and peak in 12 hour blocks as Weekday AM, Weekday PM, Weekend AM, Weekend PM.

iii. **Enabling Night Mode** to 'Yes' will limit maximum fan speed to 60% and maximum compressor speed to 50% to reduce noise at night. Correct setting of time and time zone is required for this mode to function correctly.

iv. **Enabling Timezone** to 'Yes' will enable programmed local time zones to be implemented for Scheduler, Tariff and Night Mode functions above.

Press **'Esc'** until page returns to the Menu Master.

D. **Input/output View** – Displays the actual readings as follows:

Hot Enter Temp:	Pool water temperature entering and leaving the condenser heat exchanger
Hot Leave Temp:	
Compressor 1 –	Compressor temperature and pressure readings
Low Press:	
Sat. Suction Temp:	
Suction Temp:	
High Press:	
Sat. Condenser Temp:	
Outdoor Coil Temp:	Evaporator coil temperature
Comp Dischg Temp:	Compressor discharge temperature
LP1 switch: OK	High and Low pressure switch trip or ok
HP1 switch: OK	
Comp O/Load: On/Off	Not utilised
Unit Status State: On/Off	Heat pump status
Flow Switch: On/Off	Water flow switch status (On = activated)
Remote: On/Off	Remote control of heat pump activated
DRED Status: On/Off	Not utilised
Compressor 1: On/Off	Compressor status
Rev. valve: On/Off	Reversing valve status
Fan Speed:	Current fan speed
Circ. Pump: On/Off	Circulating pump status *
Outside Temp:	Ambient air sensor temperature
Digital Inputs:	Displays the inputs (1-7)
Relay Outputs:	Displays the outputs (1-9)
EVD 1 Compressor:	Compressor cooling capacity, temps & pressure
EEV 1 Circuit:	Ostp, status, protection, suction SH
Inputs:	(EEV No1 probes value) S1, S2, S3 & S4
Compressor Reg:	Forced stop cmd, power rqd, comp speed, comp can stop/start in X seconds
Operation Data:	Suction & discharge, envelope zone, alarm countdown, suction & discharge gas temps, pressure diff/ratio, low PD countdown
Drive Data:	Motor current & voltage, DC bus voltage, drive temp, motor power, drive status, No fault
EEV Control:	Discharge temp & SH, suction SH, EEV regulation mode, actual working mode

* Only applicable if the circulating pump is connected to the heat pump.

E. **Alarm History** – Displays the last 64 alarms (A*01 ~ AL*64 screens) and the following information at time of alarm:

- Alarm fault code, time, date and any other relevant information according to alarm fault code.

- Active alarms can be cleared by continuously tapping the **'Alarm Bell'** key until "Press ALARM for 3s to reset all alarms" text is displayed, and then pressing and holding the alarm bell key for three seconds. Note: For 133kW, 203kW and 250kW models installations; Main alarms are only displayed on the Main control panel however Sub alarms are displayed on the Sub control panel with 'Stage 2 General Alarm' displayed on the Main control panel. Sub alarms must be reset on the Sub control panel and then reset on the Main control panel.

F. Board Switch – Not used for A2W Heat Pumps.

G. **Service** – passcode: 0022

a. Change display (select language)

b. Information – software version information

c. Summer/Winter (not applicable to this product)

d. Working Hours:

i. Circ. Pump / reset counter
ii. Compressor 1 / reset counter
iii. Outdoor Fan 1 / reset counter

e. BMS configuration (will time out after 5 minutes if no buttons touched)

BMS2: (protocol, address. Baudrate, stopbits, parity)
BMS Card: (protocol, address, baudrate, stopbits, parity)
NET Configuration: (enable DHCP/AutoIP)
pGDX: (IP address)
Remote On/Off: (No)

Address: 1
- If BMS Interface Card Modbus on RS485 is used, change the address value based on the unique address set by the customer's network.
- For all other BMS interface cards, ignore this value.

Protocol: CAREL/Modbus
- Choose **Modbus** only for BMS Interface Card Modbus on RS485.
- For all other BMS interface cards, choose **CAREL**.

Speed: 19200
- If BMS Interface Card Modbus on RS485 is used, change the speed value based on the customer's network.
- For all other BMS interface cards, use **19200** as speed.

f. Service Settings

i. Working Hour Set

CONNECTIONS - ELECTRICAL

ii. Prove Adjustment

iii. Thermoregulation (for multiple heat pump installation, change the no. of compressor and other settings from here). Refer to table on next page for settings.

F. Service Settings Screen	Parameter	Sub Parameter	Main	Sub
C. Thermoregulation	Thermoregulation 01	Setpoint	27.0ºC	Screen N/A
		Differential	0.5ºC	Screen N/A
		Dead band	0.5°C	Screen N/A
	Thermoregulation 02 (De-ice temperature)	Initiate	-4.0ºC	-4.0ºC
		Terminate	10.0°C	10.0°C
	Thermoregulation 03 (De-ice timers)	Delay to start	5m	5m
		Min comp before	20m	20m
		Max duration	15m	15m
		Min between	30m	30m
		Coil de-water	30s	30s
		LP delay after	30s	30s
	Thermoregulation 04 (Pump A settings)	Flow proof delay	10s	Screen N/A
		Pump min run time	300s	Screen N/A
		Pump run on time	180s	Screen N/A
		Flow recheck del	180s	Screen N/A
		Flow switch A fitted	YES	Screen N/A
	Thermoregulation 04d	Enable variable pump speed	NO	Screen N/A
	Thermoregulation 05	Blackout delay	15s	15s
		No. Compressors	Set as required (default 1)	Set as required (default 1)
		I am compressor	1 (screen N/A if 1 comp)	Set as required i.e. 2 ~ 6
		Compressor staging	Simultaneous	Screen N/A
		Controlling sensor	Entering Water A	Screen N/A
	Thermoregulation 05b	Compressor start after request (CFH) delay	15s	15s
		LP Alarm delay when comp starts in heat mode	20s	20s
	Thermoregulation 06 (Enable unit On/Off)	By digital input	No	Screen N/A
		By supervisor	No	Screen N/A
		By flow switch	No	Screen N/A
		Enable D.R.E.D	No	Screen N/A
	Thermoregulation 07 (HP/LP Safety)	LP trip set	1.8 Bar	1.8 Bar
		HP trip set	39.0 Bar	43.0 Bar
	Thermoregulation 08 (Anti-freeze safety for PHE evaporator (leave)	Low limit trip	5.0ºC	5.0ºC
		Low limit reset	8.0ºC	8.0ºC
	Thermoregulation 10 (Low outside air temp i.e low ambient aux boost)	Low outside air temp cut over point	1.0ºC	Screen N/A
		Low outside air temp differential	1.0ºC	Screen N/A
		Compressor stop in low outside air temp	NO	Screen N/A
	Thermoregulation 11	Water temp. delta too big trip point	10.0ºC	Screen N/A
		Leaving water Hi temp trip point	43.0ºC	Screen N/A
		Leaving water Hi temp reset point	38.0ºC	Screen N/A
	Thermoregulation 12	Out Air sensor	NTC	None
		Tank temp sensor	NONE	None
		Bld temp sensor	NONE	None
		UnitOfMeas	(C, bar)	(c, bar)
	Thermoregulation 13	Enable BMS maximum power limit	NO	Screen N/A
		Enable BMS demand request (DRED)	NO	Screen N/A

Table continued on next page

Table continued from previous page

F. Service Settings Screen	Parameter	Sub Parameter	Main	Sub
C. Thermoregulation (Continued)	Thermoregulation 14b (Compressor max speed)	Max speed Normal Mode	83.4%	Screen N/A
		Max speed Night Mode	50.0%	Screen N/A
		Max speed Cool Mode	50.0%	Screen N/A
		Max speed Beast Mode	100.0%	Screen N/A
		Max speed Defrost Mode	50.0%	Screen N/A
	Thermoregulation 14c (Compressor min speed)	Min speed Normal Mode	41.7%	Screen N/A
		Min speed Night Mode	41.70%	Screen N/A
		Min speed Cool Mode	41.7%	Screen N/A
		Min speed Beast Mode	41.7%	Screen N/A
		Min speed Defrost Mode	41.7%	Screen N/A
	Thermoregulation 18	Comp. config	Common (single unit) or Separate (multiple units connected via external LAN)	Screen N/A
		Fan plenum (screen N/A if No. Compressors = 1)	Common (single unit) or Separate (multiple units connected via external LAN)	Screen N/A
		User type (no affect to operation)	Commercial	Screen N/A
	Thermoregulation 19	Frost protection	Enabled	Screen N/A
		Protection active (read only)	(status i.e. yes or no)	Screen N/A
	Thermoregulation 20	Frost protection setpoint	5.0ºC	Screen N/A
		Differential	3.0ºC	Screen N/A
		Delay Time	5 min	Screen N/A
	Thermoregulation 21	Antilegionella Enabled	No	Screen N/A
		Antilegionalla Type	Fixed Period	Screen N/A
		Min duration	2 min	Screen N/A
		Max. amount of tries before alarm	3	Screen N/A

iv. User DEV/Change PW1

g. Manual Manage

i. Circ pump (**Auto**/off/on)
ii. Comp enabled (**yes**/no)
iii. Reverse Vlv (**Auto**/off/on)
iv. Condenser fan (**Auto**/off/on)
v. Boost heat (**Auto**/off/on)
vi. Reset off/on/auto over rides (**no**/yes)
vii. Speed up timers (**no**/yes)
viii. Manual initialisation of de-ice cycle (**no**/yes)

Refer to pool heater service manual for more information.

COMMISSIONING

TO FILL AND TURN ON THE POOL HEATER

The power supply to the pool heater and controller must not be switched on until the pool heater is filled with water and a satisfactory megger reading is obtained.

⚠ **Warning:** This pool heater contains electronic equipment, and 500 V insulation tests must only be conducted between actives and earth and between neutral and earth. An active to neutral test WILL damage the electronics.

COMMISSIONING PROCEDURE – STANDALONE CONFIGURATION

- Perform this procedure to commission a single (standalone) heat pump.
- If the system is comprised of multiple standalone heat pumps, perform this procedure for each heat pump.

The commissioning procedure **MUST** be performed in the order shown.

1. Check to ensure all valves are in the correct position to permit water flow through the heat pump and that the bypass balancing valve is closed.
2. Switch ON heat pump internal main switch (all models except 67kW and 98kW models).
3. Switch ON heat pump internal fans circuit breaker (all models except 67kW models).
4. Switch ON heat pump internal control circuit breaker.
5. Proceed according to system type of circulating pump control:
   - If circulating pump is not controlled by the heat pump, ensure system circulating pump is operating then proceed directly to step 6.
   - If circulating pump is controlled by the heat pump, proceed directly to step 6.
6. Turn ON electrical isolator adjacent to heat pump. The heat pump will automatically start after a 60 second delay if a call for heat is present.
7. Ensure circulating pump is primed and check pipe work for leaks.
8. Check to ensure required flow rate through the heat pump is correct. Adjust balancing valve if required.
9. Set current date and time on Main control panel and check to ensure both 'Enable scheduler' and 'Enable tariff' parameters are both set to 'NO'. *(C.Clock/Scheduler > Clock 01)*.
10. Enable night mode if required. *(C.Clock/Scheduler > Clock 01)*.

COMMISSIONING

11. Set local time zone. (*C.Clock/Scheduler* > *Timezone)*.
12. If an external remote on/off control device is installed, change 'Enable Unit ON/OFF by digital input' from 'NO' to 'YES'. (*G.Service* > *F.Service Settings* > *Thermoregulation 06* > *Enable Unit ON / OFF by Digital Input* > YES).
13. Set time/tariff control and or scheduler if required. For heats pump with power meter kit option, this is performed via the remote monitoring portal. For heat pumps without power meter kit option, this is performed via the heat pump Main control panel.
14. Adjust setpoint temperature (default 27°C) if required.
15. Perform a power cycle to reset controller with new settings i.e. turn heat pump power supply off and back on again after waiting ten seconds.
16. Check system and validate correct operation.

It is important to wait for five minutes after the heat pump has activated to ensure it continues to operate and is functioning correctly.

Note: The heat pump may not turn on immediately when it is first switched on, if it is switched on within 20 minutes to 2 hours of it having been switched off at the isolating switch, or if the heat pump has just completed a heating cycle. The pool heater will wait until the conditions for start-up are favourable in order to protect the compressor from damage. This may take up to 20 minutes to 2 hours.

Explain to a responsible officer the functions and operation of the heat pump pool heater. Upon completion of the installation and commissioning of the pool heating system, leave this guide with the responsible officer.

COMMISSIONING PROCEDURE – POWER METER CONFIGURATION

After installation and commissioning of the heat pump, please follow the "Rheem Thermal Heat Pump Integration Guide".

COMMISSIONING

COMMISSIONING PROCEDURE – BMS CONFIGURATION

Before commencing this commissioning procedure, ensure the '**Building Management Systems (BMS/BAS)'** installation procedure has been completed as detailed on **page 46**.

If the system is comprised of multiple standalone heat pumps, perform this procedure for each heat pump. Each heat pump will have its own BMS card.

For 133kW, 203kW and 250kW models, BMS settings are configured via the Main control panel.

After installation and commissioning of the heat pump, go to Service menu BMS configuration (*G.Service* > *E.BMS Config*) on the Main control panel. Refer to **page 58** for Service menu navigation chart.

BMS Configuration Type 1: BMS Interface Card **Modbus on RS485**

1. Go to BMS configuration (will time out after 5 minutes if no buttons are touched).
   a. **Address:** Set the address value based on the unique address set by the customer's network.
   b. **Protocol:** Select option 'Modbus'.
   c. **Speed:** Set to the speed value based on the customer's network.
2. BMS Parameter Tables are provided on **page 71** for customers to follow for further configuration of the customer's network.

BMS Configuration Type 2: BMS Interface card **BACnet MS-TP**

1. Go to BMS configuration (will time out after 5 minutes if no buttons touched)
   a. **Address:** No change required (address is irrelevant for this card).
   b. **Protocol:** Select option 'Carel'.
   c. **Speed:** 19200 (this value is set from factory to communicate between heat pump and BMS card).
2. Open heat pump enclosure and check BMS card.

Continued on next page

COMMISSIONING

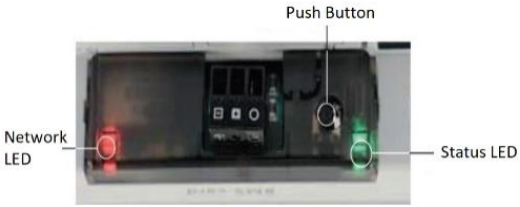

The BACnet MS-TP card features a button (PUSHBUTTON) and two indicator lights (STATUS LED and NETWORK LED).

Push Button Functions: When starting up the BACnet MS-TP card, this is used to select whether to use factory parameters or user parameters for network communication. In normal operation, reboots BACnet MS-TP card without needing to disconnect the power supply.

Status LED: Indicates communication status between heat pump and BMS card. Once the starting sequence has been completed, the Status LED flashes to indicate the quality of communication.

a. If Status LED flashes green, then communication with BACnet MS-TP card is OK.

b. If LED is red or green-red-green, then communication is not established. In this occurs, check the BMS configuration.

Network LED: Indicates communication status with the customer's network. Once the starting sequence has been completed, the Network LED flashes to indicate the quality of communication.

a. If Network LED flashes green with occasional red flashes, then communication is OK.

b. If Network LED flashes green and red ON together (BACnet MS/TP meaning = continuous Poll-For-Master), then communication is not established (connection problems, or no network device found). Check for communication wiring faults or communication settings that are not compatible with other connected network devices.

3. For further configuration of BACnet MS-TP card, please follow the "BACnet MS-TP Configuration Guide".

4. BMS Parameter Tables are provided on **page 71** for customers to follow for further configuration of the customer's network.

COMMISSIONING

BMS Configuration Type 3: BMS Interface card **BACnet TCP/IP Ethernet**

1. Go to BMS configuration (will time out after 5 minutes if no buttons touched)
   a. **Address:** No change required (address is irrelevant for this card).
   b. **Protocol:** Select option 'Carel'.
   c. **Speed:** 19200 (this value is set from factory to communicate between heat pump and BMS card).

2. Open heat pump enclosure and check BMS card.

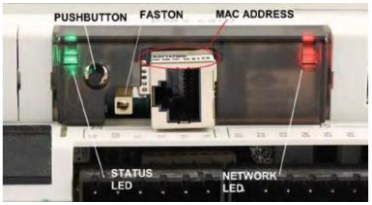

The BACnet TCP/IP Ethernet card features a button (PUSHBUTTON) and two indicator lights (STATUS LED and NETWORK LED).

Push Button Functions: When starting up the TCP/IP Ethernet card, this is used to select whether to use factory parameters or user parameters for network communication. In normal operation, reboots TCP/IP Ethernet card without needing to disconnect the power supply.

Status LED: Indicates communication status between heat pump and BMS card. Once the starting sequence has been completed, the Status LED flashes to indicate the quality of communication.

a. If Status LED flashes green or green steady, then communication with the BACnet TCP/IP Ethernet card is OK.

b. If LED is red or green-red-green, then communication is not established. In this occurs, check the BMS configuration.

Network LED: Indicates the status of the physical network connection (Ethernet connection signals), regardless of whether network parameters are correct. Usually green and flashes when data is transmitted/received.

3. For further configuration of BACnet TCP/IP Ethernet card, please follow the "BACnet TCP/IP Ethernet Configuration Guide".

4. BMS Parameter Tables are provided on **page 71** for customers to follow for further configuration of the customer's network.

BMS Parameter Tables: AURHTeMCHO version 2.0.0

COIL:

Index	Size	Variable Name	Variable Description	DataType	Default Value	Min	Max	UoM	Direction
1	1	DummyBol_01		Bool				NoUnits	Read only
2	1	DummyBol_02		Bool				NoUnits	Read only
3	1	DummyBol_03		Bool				NoUnits	Read only
4	1	DummyBol_04		Bool				NoUnits	Read only
5	1	DummyBol_05		Bool				NoUnits	Read only
6	1	DummyBol_06		Bool				NoUnits	Read only
7	1	DummyBol_07		Bool				NoUnits	Read only
8	1	DummyBol_08		Bool				NoUnits	Read only
9	1	DummyBol_09		Bool				NoUnits	Read only
10	1	DummyBol_10		Bool				NoUnits	Read only
19	1	Dout_01	Relay Output 01	Bool				NoUnits	Read only
20	1	Dout_02	Relay Output 02	Bool				NoUnits	Read only
21	1	Dout_03	Relay Output 03	Bool				NoUnits	Read only
22	1	Dout_04	Relay Output 04	Bool				NoUnits	Read only
23	1	Dout_05	Relay Output 05	Bool				NoUnits	Read only
24	1	Dout_06	Relay Output 06	Bool				NoUnits	Read only
25	1	Dout_07	Relay Output 07	Bool				NoUnits	Read only
26	1	Dout_08	Relay Output 08	Bool				NoUnits	Read only
27	1	Dout_09	Relay Output 09	Bool				NoUnits	Read only
28	1	Dout_10	Relay Output 10	Bool				NoUnits	Read only
29	1	Dout_11	Relay Output 11	Bool				NoUnits	Read only
30	1	Dout_12	Relay Output 12	Bool				NoUnits	Read only
31	1	Dout_13	Relay Output 13	Bool				NoUnits	Read only
32	1	Pmp	Circulating Pump	Bool				NoUnits	Read only
33	1	PmpB	Circulating Pump for Source water	Bool				NoUnits	Read only
35	1	Comp1_En	remote / maintenance enable of compressor 1	Bool	TRUE			NoUnits	ReadWrite
36	1	Comp2_En	remote / maintenance enable of compressor 2	Bool	TRUE			NoUnits	ReadWrite
37	1	Comp3_En	remote / maintenance enable of compressor 3	Bool	TRUE			NoUnits	ReadWrite
38	1	Comp4_En	remote / maintenance enable of compressor 4	Bool	TRUE			NoUnits	ReadWrite
39	1	Comp5_En	remote / maintenance enable of compressor 5	Bool				NoUnits	ReadWrite
40	1	Comp6_En	remote / maintenance enable of compressor 6	Bool				NoUnits	ReadWrite
41	1	DeviceStatusComp1	Actual status of compressor 1	Bool				NoUnits	Read only
42	1	DeviceStatusComp2	Actual status of compressor 2	Bool				NoUnits	Read only
43	1	DeviceStatusComp3	Actual status of compressor 3	Bool				NoUnits	Read only
44	1	DeviceStatusComp4	Actual status of compressor 4	Bool				NoUnits	Read only

45	1	DeviceStatusComp5	Actual status of compressor 5	Bool				NoUnits	Read only
46	1	DeviceStatusComp6	Actual status of compressor 6	Bool				NoUnits	Read only
49	1	UnitOn	Unit On status: TRUE = Unit ON	Bool				NoUnits	ReadWrite
50	1	OnOffUnitMng.BmsOnOff	Unit On/Off by BMS	Bool				NoUnits	ReadWrite
51	1	AlarmMng.AlrmResByBms	Alarm reset by BMS	Bool				NoUnits	ReadWrite
52	1	En_tfr	Enable Tariff	Bool	TRUE			NoUnits	ReadWrite
53	1	DeviceStatusRevVlv1	Actual status of Reverse Valve 1	Bool				NoUnits	Read only
54	1	DeviceStatusRevVlv2	Actual status of Reverse Valve 2	Bool				NoUnits	Read only
55	1	DeviceStatusRevVlv3	Actual status of Reverse Valve 3	Bool				NoUnits	Read only
56	1	DeviceStatusRevVlv4	Actual status of Reverse Valve 4	Bool				NoUnits	Read only
57	1	DeviceStatusRevVlv5	Actual status of Reverse Valve 5	Bool				NoUnits	Read only
58	1	DeviceStatusRevVlv6	Actual status of Reverse Valve 6	Bool				NoUnits	Read only
60	1	En_Elect_Heat	Electric boost element is installed	Bool	TRUE			NoUnits	ReadWrite
61	1	BMS_Boost	Boost heat activated by BMS	Bool				NoUnits	ReadWrite
62	1	En_BMS_demand	Enable BMS demand capacity	Bool				NoUnits	ReadWrite
63	1	En_PwrLim	Enable power limiting	Bool				NoUnits	ReadWrite
64	1	EnSchedOnOff	Enable Scheduler	Bool				NoUnits	ReadWrite
65	1	Special_act	Special timezone active	Bool				NoUnits	Read only
66	1	LowAmbMode	Enable Setback offset	Bool				NoUnits	ReadWrite
67	1	En_NightMode	Enable Night Mode	Bool				NoUnits	ReadWrite
68	1	Night_act	Night Mode active	Bool				NoUnits	ReadWrite
69	1	En_FrostSaf	Enable frost protection safety	Bool	TRUE			NoUnits	ReadWrite
70	1	Pmp_HR_Res	Pump hour run reset	Bool				NoUnits	ReadWrite
71	1	PmpB_HR_Res	Pump B hour run reset	Bool				NoUnits	ReadWrite
72	1	Comp_HR_Res1	Compressor 1 Hour run reset	Bool				NoUnits	ReadWrite
73	1	Comp_HR_Res2	Compressor 2 Hour run reset	Bool				NoUnits	ReadWrite
74	1	Comp_HR_Res3	Compressor 3 Hour run reset	Bool				NoUnits	ReadWrite
75	1	Comp_HR_Res4	Compressor 4 Hour run reset	Bool				NoUnits	ReadWrite
76	1	Comp_HR_Res5	Compressor 5 Hour run reset	Bool				NoUnits	ReadWrite
77	1	Comp_HR_Res6	Compressor 6 Hour run reset	Bool				NoUnits	ReadWrite
78	1	OdoorFanHR_Res1	Outdoor fan 1 hour run reset	Bool				NoUnits	ReadWrite
79	1	OdoorFanHR_Res2	Outdoor fan 2 hour run reset	Bool				NoUnits	ReadWrite
80	1	OdoorFanHR_Res3	Outdoor fan 3 hour run reset	Bool				NoUnits	ReadWrite
81	1	OdoorFanHR_Res4	Outdoor fan 4 hour run reset	Bool				NoUnits	ReadWrite
82	1	OdoorFanHR_Res5	Outdoor fan 5 hour run reset	Bool				NoUnits	ReadWrite
83	1	OdoorFanHR_Res6	Outdoor fan 6 hour run reset	Bool				NoUnits	ReadWrite
84	1	Flw_SW_Present	Flow switch present	Bool	TRUE			NoUnits	ReadWrite
85	1	EnLWTCtrl	Enable Leaving water temp control	Bool				NoUnits	ReadWrite
86	1	En_CompLowAmb	Keep compressor enabled in low ambient condition	Bool	TRUE			NoUnits	ReadWrite

87	1	En_PoolSpa	Pool/Spa Installed	Bool				NoUnits	ReadWrite
119	1	GlbAlrm	Global alarms (at least one active alarm)	Bool				NoUnits	Read only
120	1	Al_Prb_01.Trigger	Probe 01 Alarm - Alarm status Trigger	Bool				NoUnits	Read only
121	1	Al_Prb_02.Trigger	Probe 02 Alarm - Alarm status Trigger	Bool				NoUnits	Read only
122	1	Al_Prb_03.Trigger	Probe 03 Alarm - Alarm status Trigger	Bool				NoUnits	Read only
123	1	Al_Prb_04.Trigger	Probe 04 Alarm - Alarm status Trigger	Bool				NoUnits	Read only
124	1	Al_Prb_05.Trigger	Probe 05 Alarm - Alarm status Trigger	Bool				NoUnits	Read only
125	1	Al_Prb_06.Trigger	Probe 06 Alarm - Alarm status Trigger	Bool				NoUnits	Read only
126	1	Al_Prb_07.Trigger	Probe 07 Alarm - Alarm status Trigger	Bool				NoUnits	Read only
127	1	Al_Prb_08.Trigger	Probe 08 Alarm - Alarm status Trigger	Bool				NoUnits	Read only
128	1	Al_Prb_09.Trigger	Probe 09 Alarm - Alarm status Trigger	Bool				NoUnits	Read only
129	1	Al_Prb_10.Trigger	Probe 10 Alarm - Alarm status Trigger	Bool				NoUnits	Read only
130	1	Al_Prb_11.Trigger	Probe 11 Alarm - Alarm status Trigger	Bool				NoUnits	Read only
131	1	Al_Prb_12.Trigger	Probe 12 Alarm - Alarm status Trigger	Bool				NoUnits	Read only
132	1	DeviceAlarmComp1	Alarm Comp 1	Bool				NoUnits	Read only
133	1	DeviceAlarmComp2	Alarm Comp 2	Bool				NoUnits	Read only
134	1	DeviceAlarmComp3	Alarm Comp 3	Bool				NoUnits	Read only
135	1	DeviceAlarmComp4	Alarm Comp 4	Bool				NoUnits	Read only
136	1	DeviceAlarmComp5	Alarm Comp 5	Bool				NoUnits	Read only
137	1	DeviceAlarmComp6	Alarm Comp 6	Bool				NoUnits	Read only
138	1	Comp1OL	Compressor 1 O/L	Bool				NoUnits	Read only
139	1	Comp2OL	Compressor 2 O/L	Bool				NoUnits	Read only
140	1	Comp3OL	Compressor 3 O/L	Bool				NoUnits	Read only
141	1	Comp4OL	Compressor 4 O/L	Bool				NoUnits	Read only
142	1	Comp5OL	Compressor 5 O/L	Bool				NoUnits	Read only
143	1	Comp6OL	Compressor 6 O/L	Bool				NoUnits	Read only
144	1	TDelta_AL1	Temperature Delta Alarm 1 (Hot side)	Bool				NoUnits	Read only
145	1	TDelta_AL2	Temperature Delta Alarm 2 (Hot side)	Bool				NoUnits	Read only
146	1	TDelta_AL3	Temperature Delta Alarm 3 (Hot side)	Bool				NoUnits	Read only
147	1	TDelta_AL4	Temperature Delta Alarm 4 (Hot side)	Bool				NoUnits	Read only
148	1	TDelta_AL5	Temperature Delta Alarm 5 (Hot side)	Bool				NoUnits	Read only
149	1	TDelta_AL6	Temperature Delta Alarm 6 (Hot side)	Bool				NoUnits	Read only
150	1	TDeltaB_AL1	Temperature Delta Alarm 1 (Cool side)	Bool				NoUnits	Read only
151	1	TDeltaB_AL2	Temperature Delta Alarm 2 (Cool side)	Bool				NoUnits	Read only
152	1	TDeltaB_AL3	Temperature Delta Alarm 3 (Cool side)	Bool				NoUnits	Read only
153	1	TDeltaB_AL4	Temperature Delta Alarm 4 (Cool side)	Bool				NoUnits	Read only
154	1	TDeltaB_AL5	Temperature Delta Alarm 5 (Cool side)	Bool				NoUnits	Read only
155	1	TDeltaB_AL6	Temperature Delta Alarm 6 (Cool side)	Bool				NoUnits	Read only
156	1	Al_LWT_Hi.Trigger	High Leaving Water Temperature Alarm - Alarm status Trigger	Bool				NoUnits	Read only

Holding Registers:

Index	Size	Variable Name	Variable Description	Data Type	Default Value	Min	Max	UoM	Direction
1	1	BMS_DummyReal_01		Int				NoUnits	Read only
2	1	BMS_DummyReal_02		Int				NoUnits	Read only
3	1	BMS_DummyReal_03		Int				NoUnits	Read only
4	1	BMS_DummyReal_04		Int				NoUnits	Read only
5	1	BMS_DummyReal_05		Int				NoUnits	Read only
6	1	BMS_DummyReal_06		Int				NoUnits	Read only
7	1	BMS_DummyReal_07		Int				NoUnits	Read only
8	1	BMS_DummyReal_08		Int				NoUnits	Read only
9	1	BMS_DummyReal_09		Int				NoUnits	Read only
10	1	BMS_DummyReal_10		Int				NoUnits	Read only
11	1	BMS_DummyReal_11		Int				NoUnits	Read only
12	1	BMS_DummyReal_12		Int				NoUnits	Read only
13	1	BMS_Aout_01	Modulating Output 01	Int				NoUnits	Read only
14	1	BMS_Aout_02	Modulating Output 02	Int				NoUnits	Read only
15	1	BMS_Aout_03	Modulating Output 03	Int				NoUnits	Read only
16	1	BMS_Aout_04	Modulating Output 04	Int				NoUnits	Read only
17	1	BMS_Aout_05	Modulating Output 05	Int				NoUnits	Read only
18	1	BMS_Aout_06	Modulating Output 06	Int				NoUnits	Read only
23	1	BMS_CtrlT	Current Controlling Temperature	Int				NoUnits	Read only
24	1	BMS_OAT	Outside Air Temperature	Int				NoUnits	Read only
25	1	BMS_EW_T	Entering Water Temperature (Hot side)	Int				NoUnits	Read only
26	1	BMS_LW_T	Leaving Water Temperature (Hot side)	Int				NoUnits	Read only
27	1	BMS_CondT	Condenser Temperature	Int				NoUnits	Read only
28	1	BMS_setP_active	Current Active Setpoint	Int				NoUnits	Read only
29	1	BMS_diff_active	Current Active Differential	Int				NoUnits	ReadWrite
30	1	BMS_SetP	Setpoint (non Pool / Spa)	Int				NoUnits	ReadWrite
31	1	BMS_Ctrl_DB	Control Dead Band	Int				NoUnits	ReadWrite
32	1	BMS_PB	Proportional Band / Differential	Int				NoUnits	ReadWrite
33	1	BMS_EW_TB	Entering Water Temperature (Cold side)	Int				NoUnits	Read only
34	1	BMS_LW_TB	Leaving Water Temperature (Cold side)	Int				NoUnits	Read only
35	1	BMS_TankT	Tank Temperature	Int				NoUnits	Read only
36	1	BMS_Bld_SupplyT	Building Supply Temperature	Int				NoUnits	Read only
39	1	BMS_WaterDelta	Entering Vs Leaving water temperature delta	Int				NoUnits	ReadWrite
50	1	BMS_LW_HiTrip	Leave Water Hi Trip Temperature	Int				NoUnits	ReadWrite
51	1	BMS_LW_HiRes	Leave Water Hi Reset Temperature	Int				NoUnits	ReadWrite
52	1	BMS_LW_LoTrip	Leave Water Lo Trip Temperature	Int				NoUnits	ReadWrite

53	1	BMS_LW_LoRes	Leave Water Lo Reset Temperature	Int				NoUnits	ReadWrite
54	1	BMS_EW_LoTrip	Entering Water Lo Trip Temperature	Int				NoUnits	ReadWrite
55	1	BMS_EW_LoReset	Entering Water Lo Reset Temperature	Int				NoUnits	ReadWrite
56	1	BMS_Comp_HiTrip	Compressor Discharge Temperature Trip	Int				NoUnits	ReadWrite
60	1	BMS_BLDC_spd		Int				NoUnits	ReadWrite
65	1	BMS_EEV_pos		Int				NoUnits	ReadWrite
100	1	BMS_tfr_0_set		Int				NoUnits	ReadWrite
101	1	BMS_tfr_1_set		Int				NoUnits	ReadWrite
102	1	BMS_tfr_2_set		Int				NoUnits	ReadWrite
103	1	BMS_tfr_3_set		Int				NoUnits	ReadWrite
104	1	BMS_tfr_0_diff		Int				NoUnits	ReadWrite
105	1	BMS_tfr_1_diff		Int				NoUnits	ReadWrite
106	1	BMS_tfr_2_diff		Int				NoUnits	ReadWrite
107	1	BMS_tfr_3_diff		Int				NoUnits	ReadWrite
108	1	BMS_DRED_SetP_Offset		Int				NoUnits	ReadWrite
109	1	BMS_DRED_SetP_Abs		Int				NoUnits	ReadWrite
110	1	BMS_DRED_diff_Offset		Int				NoUnits	ReadWrite
111	1	BMS_DRED_diff_Abs		Int				NoUnits	ReadWrite
112	1	BMS_SetbackLoLim		Int				NoUnits	ReadWrite
113	1	BMS_SetbackUpLim		Int				NoUnits	ReadWrite
114	1	BMS_SetbackDelta		Int				NoUnits	ReadWrite
115	1	BMS_OAT_Lo		Int				NoUnits	ReadWrite
116	1	BMS_OAT_LoDiff		Int				NoUnits	ReadWrite
117	1	BMS_PoolSetP		Int				NoUnits	ReadWrite
118	1	BMS_PoolDiff		Int				NoUnits	ReadWrite
119	1	BMS_SpaSetP		Int				NoUnits	ReadWrite
120	1	BMS_SpaDiff		Int				NoUnits	ReadWrite
121	1	BMS_FrostSetp		Int				NoUnits	ReadWrite
122	1	BMS_FrostDiff		Int				NoUnits	ReadWrite
167	1	BMS_PumpSpeedMax		Int				NoUnits	ReadWrite
168	1	BMS_PumpSpeedMin		Int				NoUnits	ReadWrite
169	1	BMS_LWT_PB		Int				NoUnits	ReadWrite
170	1	BMS_LWT_Ti		Int				NoUnits	ReadWrite
171	1	BMS_LWT_Td		Int				NoUnits	ReadWrite
173	1	BMS_PoolPrb		Int				NoUnits	Read only
174	1	BMS_SpaPrb		Int				NoUnits	Read only
175	1	BMS_LP_P_set		Int				NoUnits	ReadWrite
176	1	BMS_HP_P_set		Int				NoUnits	ReadWrite
177	1	BMS_De_Ice_init		Int				NoUnits	ReadWrite

178	1	BMS_De_Ice_Thrsh		Int				NoUnits	ReadWrite
179	1	BMS_MaxDemandLim		Int				NoUnits	ReadWrite
5002	1	tfr_00	type of tariff - timeband 0 weekday	Int		0	2	NoUnits	ReadWrite
5003	1	tfr_01	type of tariff - timeband 1 weekday	Int		0	2	NoUnits	ReadWrite
5004	1	tfr_02	type of tariff - timeband 2 weekday	Int		0	2	NoUnits	ReadWrite
5005	1	tfr_03	type of tariff - timeband 3 weekday	Int		0	2	NoUnits	ReadWrite
5006	1	tfr_04	type of tariff - timeband 4 weekday	Int		0	2	NoUnits	ReadWrite
5007	1	tfr_05	type of tariff - timeband 5 weekday	Int		0	2	NoUnits	ReadWrite
5008	1	tfr_06	type of tariff - timeband 6 weekday	Int		0	2	NoUnits	ReadWrite
5009	1	tfr_07	type of tariff - timeband 7 weekday	Int		0	2	NoUnits	ReadWrite
5010	1	tfr_08	type of tariff - timeband 8 weekday	Int		0	2	NoUnits	ReadWrite
5011	1	tfr_09	type of tariff - timeband 9 weekday	Int		0	2	NoUnits	ReadWrite
5012	1	tfr_10	type of tariff - timeband 10 weekday	Int		0	2	NoUnits	ReadWrite
5013	1	tfr_11	type of tariff - timeband 11 weekday	Int		0	2	NoUnits	ReadWrite
5014	1	tfr_12	type of tariff - timeband 12 weekday	Int		0	2	NoUnits	ReadWrite
5015	1	tfr_13	type of tariff - timeband 13 weekday	Int		0	2	NoUnits	ReadWrite
5016	1	tfr_14	type of tariff - timeband 14 weekday	Int		0	2	NoUnits	ReadWrite
5017	1	tfr_15	type of tariff - timeband 15 weekday	Int		0	2	NoUnits	ReadWrite
5018	1	tfr_16	type of tariff - timeband 16 weekday	Int		0	2	NoUnits	ReadWrite
5019	1	tfr_17	type of tariff - timeband 17 weekday	Int		0	2	NoUnits	ReadWrite
5020	1	tfr_18	type of tariff - timeband 18 weekday	Int		0	2	NoUnits	ReadWrite
5021	1	tfr_19	type of tariff - timeband 19 weekday	Int		0	2	NoUnits	ReadWrite
5022	1	tfr_20	type of tariff - timeband 20 weekday	Int		0	2	NoUnits	ReadWrite
5023	1	tfr_21	type of tariff - timeband 21 weekday	Int		0	2	NoUnits	ReadWrite
5024	1	tfr_22	type of tariff - timeband 22 weekday	Int		0	2	NoUnits	ReadWrite
5025	1	tfr_23	type of tariff - timeband 23 weekday	Int		0	2	NoUnits	ReadWrite
5026	1	trfw_00	type of tariff - timeband 0 week end	Int	0	0	2	NoUnits	ReadWrite
5027	1	trfw_01	type of tariff - timeband 1 week end	Int		0	2	NoUnits	ReadWrite
5028	1	trfw_02	type of tariff - timeband 2 week end	Int		0	2	NoUnits	ReadWrite
5029	1	trfw_03	type of tariff - timeband 3 week end	Int		0	2	NoUnits	ReadWrite
5030	1	trfw_04	type of tariff - timeband 4 week end	Int		0	2	NoUnits	ReadWrite
5031	1	trfw_05	type of tariff - timeband 5 week end	Int		0	2	NoUnits	ReadWrite
5032	1	trfw_06	type of tariff - timeband 6 week end	Int		0	2	NoUnits	ReadWrite
5033	1	trfw_07	type of tariff - timeband 7 week end	Int		0	2	NoUnits	ReadWrite
5034	1	trfw_08	type of tariff - timeband 8 week end	Int		0	2	NoUnits	ReadWrite
5035	1	trfw_09	type of tariff - timeband 9 week end	Int		0	2	NoUnits	ReadWrite
5036	1	trfw_10	type of tariff - timeband 10 week end	Int	0	0	2	NoUnits	ReadWrite
5037	1	trfw_11	type of tariff - timeband 11 week end	Int	0	0	2	NoUnits	ReadWrite
5038	1	trfw_12	type of tariff - timeband 12 week end	Int	0	0	2	NoUnits	ReadWrite

5039	1	trfw_13	type of tariff - timeband 13 week end	Int	0	0	2	NoUnits	ReadWrite
5040	1	trfw_14	type of tariff - timeband 14 week end	Int	0	0	2	NoUnits	ReadWrite
5041	1	trfw_15	type of tariff - timeband 15 week end	Int	0	0	2	NoUnits	ReadWrite
5042	1	trfw_16	type of tariff - timeband 16 week end	Int	0	0	2	NoUnits	ReadWrite
5043	1	trfw_17	type of tariff - timeband 17 week end	Int	0	0	2	NoUnits	ReadWrite
5044	1	trfw_18	type of tariff - timeband 18 week end	Int	0	0	2	NoUnits	ReadWrite
5045	1	trfw_19	type of tariff - timeband 19 week end	Int	0	0	2	NoUnits	ReadWrite
5046	1	trfw_20	type of tariff - timeband 20 week end	Int	0	0	2	NoUnits	ReadWrite
5047	1	trfw_21	type of tariff - timeband 21 week end	Int	0	0	2	NoUnits	ReadWrite
5048	1	trfw_22	type of tariff - timeband 22 week end	Int	0	0	2	NoUnits	ReadWrite
5049	1	trfw_23	type of tariff - timeband 23 week end	Int	0	0	2	NoUnits	ReadWrite
5050	1	tfr_active	current active Tariff	Int				NoUnits	Read only
5104	1	GeneralMng.Year	Actual year	UInt		0	99	NoUnits	Read only
5105	1	GeneralMng.Month	Actual month	UInt		0	99	NoUnits	Read only
5106	1	GeneralMng.Day	Actual day	UInt		0	99	NoUnits	Read only
5107	1	GeneralMng.Hour	Actual hour	UInt		0	99	NoUnits	Read only
5108	1	GeneralMng.Minute	Actual minute	UInt		0	99	NoUnits	Read only
5109	1	Mode	mode of unit (1=heat only 2=cool only 3=Auto)	Int	3	1	3	NoUnits	ReadWrite
5110	1	BMS_BMS_demand	BMS demand capacity	Int				NoUnits	ReadWrite
5111	1	BMS_BMS_PwrReq	BMS Maximum Power Request	Int				NoUnits	ReadWrite
5112	1	BMS_MaxPwrOffline	Maximum power when offline	Int				NoUnits	ReadWrite
5113	1	PwrLimOffDT	Offline delay	Int	120	15	300	Seconds	ReadWrite
5114	1	NightEndHr	Night Mode End Hour	Int	7	0	23	NoUnits	ReadWrite
5115	1	NightEndMin	Night Mode End Minute	Int	0	0	59	NoUnits	ReadWrite
5116	1	NightStartHr	Night Mode Start Hour	Int	20	0	23	NoUnits	ReadWrite
5117	1	NightStartMin	Night Mode Start Minute	Int	0	0	59	NoUnits	ReadWrite
5119	1	PmpStageDT	Pump Stage Delay Time to compressor	Int	5	0	99	Seconds	ReadWrite
5120	1	PmpStageOffDT	Pump Stage Off Delay Time	Int	60	0	999	Seconds	ReadWrite
5121	1	PmpBStageOffDT	Pump B Stage delay after Pump A	Int	30	0	999	Seconds	ReadWrite
5122	1	Pmp_Pulse	Variable Speed Pump Pulse duration on start	Int	5	0	30	Seconds	ReadWrite
5123	1	Blackout_DT	Delay time start up after blackout	Int	20	10	60	Seconds	ReadWrite
5124	1	CtrlSenSel	Controlling Sensor Selection	Int	0	0	CtrlSen SelLimit	NoUnits	ReadWrite
5125	1	PoolPrbSel	Pool probe selection	Int	0	0	PriorityP rbMax	NoUnits	ReadWrite
5126	1	CompStart_DT	Delay after Compressor request is sent to Safety block	Int	0	0	120	Seconds	ReadWrite
5127	1	HeatLPLockDT	LP lock out delay for Hesat Start	Int	180	5	600	Seconds	ReadWrite
5128	1	ElectrCompNo	Percentage of compressors in AL to force Electric	Int	50	0	100	NoUnits	ReadWrite
5129	1	BoostAct_DT	Active Boost Delay Time	Int	5	0	99	Minutes	ReadWrite
5130	1	PoolSpaPriority	0 = off; 1 = pool priority; 2 = spa priority;	Byte	0	0	2	NoUnits	ReadWrite

5131	1	PoolChgOver	Pool change over time	Int	30	15	300	Minutes	ReadWrite
5132	1	SpaChgOver	Spa change over time	Int	30	15	300	Minutes	ReadWrite
5136	1	UnitStatus	Unit status	UInt		0	9	NoUnits	Read only
5141	1	PmpHRCnt	Pump hour run count	UInt				Hours	Read only
5142	1	PmpBHRCnt	Pump B hour run count	UInt				Hours	Read only
5143	1	Comp1HRCnt	Compressor 1 Hour run count	UInt				Hours	Read only
5144	1	Comp2HRCnt	Compressor 2 Hour run count	UInt				Hours	Read only
5145	1	Comp3HRCnt	Compressor 3 Hour run count	UInt				Hours	Read only
5146	1	Comp4HRCnt	Compressor 4 Hour run count	UInt				Hours	Read only
5147	1	Comp5HRCnt	Compressor 5 Hour run count	UInt				Hours	Read only
5148	1	Comp6HRCnt	Compressor 6 Hour run count	UInt				Hours	Read only
5149	1	OdoorFan1HRCnt	Outdoor fan 1 Hour run count	UInt				Hours	Read only
5150	1	OdoorFan2HRCnt	Outdoor fan 2 Hour run count	UInt				Hours	Read only
5151	1	OdoorFan3HRCnt	Outdoor fan 3 Hour run count	UInt				Hours	Read only
5152	1	OdoorFan4HRCnt	Outdoor fan 4 Hour run count	UInt				Hours	Read only
5153	1	OdoorFan5HRCnt	Outdoor fan 5 Hour run count	UInt				NoUnits	Read only
5154	1	OdoorFan6HRCnt	Outdoor fan 6 Hour run count	UInt				NoUnits	Read only
5155	1	PmpHRCntThrsh	Pump hour run count threshold	UInt	10000	0	65000	Hours	ReadWrite
5156	1	PmpBHRCntThrsh	Pump B hour run count threshold	UInt	10000	0	65000	Hours	ReadWrite
5157	1	Comp1HRCntThrsh	Compressor 1 Hour run threshold	UInt	10000	0	65000	Hours	ReadWrite
5158	1	Comp2HRCntThrsh	Compressor 2 Hour run threshold	UInt	10000	0	65000	Hours	ReadWrite
5159	1	Comp3HRCntThrsh	Compressor 3 Hour run threshold	UInt	10000	0	65000	Hours	ReadWrite
5160	1	Comp4HRCntThrsh	Compressor 4 Hour run threshold	UInt	10000	0	65000	Hours	ReadWrite
5161	1	Comp5HRCntThrsh	Compressor 5 Hour run threshold	UInt	10000	0	65000	Hours	ReadWrite
5162	1	Comp6HRCntThrsh	Compressor 6 Hour run threshold	UInt	10000	0	65000	Hours	ReadWrite
5163	1	OdoorFan1HRCntThrsh	Outdoor fan 1 Hour run threshold	UInt	10000	0	65000	Hours	ReadWrite
5164	1	OdoorFan2HRCntThrsh	Outdoor fan 2 Hour run threshold	UInt	10000	0	65000	Hours	ReadWrite
5165	1	OdoorFan2HRCntThrsh	Outdoor fan 2 Hour run threshold	UInt	10000	0	65000	Hours	ReadWrite
5166	1	OdoorFan4HRCntThrsh	Outdoor fan 4 Hour run threshold	UInt	10000	0	65000	Hours	ReadWrite
5167	1	OdoorFan5HRCntThrsh	Outdoor fan 5 Hour run threshold	UInt	10000	0	65000	NoUnits	ReadWrite
5168	1	OdoorFan6HRCntThrsh	Outdoor fan 6 Hour run threshold	UInt	10000	0	65000	NoUnits	ReadWrite
5169	1	Frost_DT	Frost Activation delay	Int	5	0	99	Minutes	ReadWrite
5170	1	De_Ice_Init_time	de-ice initialisation cumulative time	Int	5	0	99	Minutes	ReadWrite
5171	1	de_ice_DT_MinRub	Comp min run time before defrost	Int	20	0	999	Minutes	ReadWrite
5172	1	De_Ice_Max	Maximum duration of a de-ice cycle	Int	15	0	999	Minutes	ReadWrite
5173	1	De_Ice_DT_OnOn	Delay between 2 consecutive de-ice cycles	Int	30	0	999	Minutes	ReadWrite
5174	1	De_Ice_DeW	Fan only coil de-water Delay Time	Int	30	0	999	Seconds	ReadWrite
5175	1	De_IceLPLockDT	LP lock out delay after De Ice finish	Int	300	5	600	Seconds	ReadWrite
5176	1	PmpMinOn	Pump Minimum on time	Int	300	0	999	Seconds	ReadWrite

5177	1	Pmp_Run_On	Pump run on time delay	Int	180	0	999	Seconds	ReadWrite
5178	1	BMS_PumpSpeedFlt		Int				NoUnits	ReadWrite
5179	1	PmpCycleT	Pump cycle time for temperature testinf (0.5 hour increments)	Int	4	1	10	Hours	ReadWrite
5180	1	PmpBMinOn	Pump B Minimum on time	Int	300	0	999	Seconds	ReadWrite
5181	1	PmpB_Run_On	Pump run on time delay (cold pump)	Int	180	0	999	Seconds	ReadWrite
5182	1	PmpBStageDT	Pump B Stage Delay Time to Pump A	Int	10	0	99	Seconds	ReadWrite
5183	1	Flw_Recheck	Time delay for Flow Re Checking	Int	180	0	999	Seconds	ReadWrite
5184	1	Flw_Proof_DT	Flow Proof Delay	Int	30	0	30	Seconds	ReadWrite
5185	1	FlwDT_Off	Off delay when flow switch used for on/off	Int	2	1	6	Seconds	ReadWrite

TO TURN OFF THE POOL HEATER

If it is necessary to turn off the pool heater on completion of the installation, such as on a building site or where the premises are vacant, then:

Switch off the electrical supply at the isolating switch to the pool heater.

DRAINING THE POOL HEATER

To drain the pool heater:

Turn off the pool heater (refer to “To Turn Off The Pool heater” on **page 12**).

Close the water inlet and water outlet isolation valves at the pool heater.

Place a bucket under the water inlet.

Undo the unions at the inlet and outlet of the pool heater. The heat pump heat exchanger holds 5 to 10 litres of water (model dependent) and will drain into the bucket.

TROUBLE SHOOTING

- **Heat Pump Won't Start**

  A delay of up to 20 minutes to 2 hours can be experienced before the heat pump starts operating.

- **Incorrect Phase Rotation**

  ⚠ **Accessing the phase detect relay requires the removal of access covers which will expose live 415 VAC wiring. Removal of access covers must only be performed by suitably qualified persons.**

Phase Detect Relay

The phase detect relay will open circuit if the heat pump has been wired with incorrect phase rotation or if a phase has failed. Both green and yellow LEDs on the relay will be illuminated if phase rotation is correct.

- **Alarm Light on Heat Pump Controller**

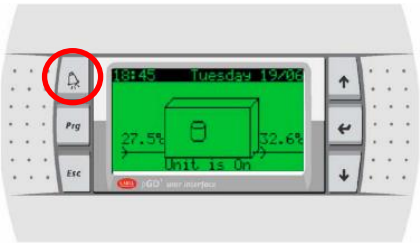

If the alarm light is flashing RED, check the alarm by pressing the alarm button. Phone your nearest Rheem Service Department or Accredited Service Agent (or Service Centre in NZ) to inform about the alarm.

- **Low Ambient Temperature**

  Ice may begin to form on the evaporator when the ambient air temperature falls below 7ºC. If this occurs, the heat pump automatically uses reverse refrigerant flow to melt any ice that may form on the evaporator coil when

operating in low ambient air temperatures. For most applications, automatic defrost should be satisfactory to meet pool heating demands.

If the ambient air temperature falls below 0ºC, the heat pump will cease heating to protect heat pump components from damage. The heat pump will start operating again when the air temperature increases to above 0ºC.

- **Heat Pump Starts Then Turns Off Soon After**

  This could be caused by:

  a. Insufficient water flow rate through the heat exchanger. Check pipe sizing (refer **page 40**), check obstructions, check lines and pump are bled, check pump is operating, check temperature rise across inlet and outlet.

     Note: Multiple heat pumps **MUST** be installed using Equa-Flow® / Tichlemann principles to ensure the demand on each heat pump in the bank is the same as any other. Incorrect manifolding **WILL** affect the performance of the heat pump. Refer to 'Manifold Installations' on **page 39**.

  b. Refrigerant charge too high? Refer to Alarm.

  c. Refrigerant charge too low? Refer to Alarm.

  Turn heat pump off then on again at isolating switch to reset system.

- **Heat pump compressor excessively noisy**

  Check for correct phase rotation (refer to **page 81).**

AUTOMATIC DEFROST

Ice may begin to form on the evaporator when the ambient air temperature falls below 7ºC. If this occurs, the heat pump automatically uses reverse refrigerant flow to melt any ice that may form on the evaporator coil when operating in low ambient air temperatures. For most applications, automatic defrost should be satisfactory to meet pool heating demands.

This page is intentionally blank

This page is intentionally blank